WINE GUARDIAN®

Ducted Split
Wine Cellar Cooling Systems

Installation, Operation and Maintenance Guide

Model DS025, DS050, DS088, DS200 (60Hz)
Model WGS40, WGS75, WGS100, WGS175 (50Hz)

Manufactured by:

AiR INNOVATIONS

wineguardian.com airinnovations.com

Wine Guardian reserves the right, without notice, to make changes to this document at its sole discretion.
Please visit our web site for the most current version of the Wine Guardian manual and other literature.
Wine Guardian is a registered trademark (2,972,262) of Air Innovations, Inc.
Condensing Unit Patent No. U.S. D791295, EU 003189349-0001
Edition 03-2021

© Air Innovations, 2021 Part# 15H0183-00 REV A

Table of Contents

Directory of Terms *6*

Receiving, Inspecting and Unpacking the Wine Guardian Unit *8*

Review the Packing Slip to Verify: 8

Check the fan coil unit for 8

Check the condensing unit for: 8

General Description *9*

The Wine Guardian Ducted Split System Contains 9

Wine Guardian Fan Coil Unit 10

Electrical Controls 10

Condensing Unit 10

Accessories and Optional Equipment 11

Condensate Pump (Part # 94H0018-00) 11

Duct Collars and Flexible Ducts 11

Extended Compressor Warranty 11

Heating Coils 11

Humidifier 11

Xtreme Low Ambient (see illustrations on following page) 11

Xtreme Low Ambient Illustrations 12

Overview of the Wine Guardian fan coil 13

Wine Guardian dimension for split ducted systems DS025, WGS40, DS050, WGS75, DS088, WGS100, DS200, and WGS175 13

Condensing unit dimensions 14

Refrigeration Illustration of the system 15

Magnified Image of the Condensing Unit 16

Wiring Diagram for DS025, DS050, WGS40, & WGS75 17

Wiring Diagram for DS088 and WGS100 18

Wiring Diagram for DS200 and WGS175 Units 19

Wiring Diagram for Replacement Fan Motor (XR 115/230 Models) 20

Wiring Diagram for DS025 and WGS40 Condensing Unit 21

Wiring Diagram for DS050 and WGS75 Condensing Unit 22

Wiring Diagram for DS088 and WGS100 Condensing Unit 23

Wiring Diagram for DS200 and WGS175 Condensing Unit 24

Ducted Split Systems Specifications - 60Hz Models DS025, DS050, DS088, DS200 25

Ducted Split System Specifications – 50 Hz Models WGS40, WGS75, WGS100, WGS175 26

Safety *27*

Safety Message Conventions 27

Danger 27

Warning 27

Caution 27

Lockout/Tagout Procedure 28
Safety Considerations 28
Safety Hazards 28
Electrical Hazards 28
Electrical Shock Hazards 28
Hot Parts Hazards 28
Moving Parts Hazards 28
Equipment Safety Interlocks 29
Main Power Switch 29
Installation 31
Pre-installation Test 31
Air Flow Diagram 31
Planning the Installation 33
Addressing Items in the Planning Process 33
Performing a Pre-Installation Check 33
Installing the Fan Coil Unit 34
Floor Mounting 34
Wall Mounting 34
Ceiling Mounting 35
Typical Mounting Arrangements 35
Handling and Installation 35
Floor Mount 36
Wall Mount 37
Fig. 3 37
Installing the Ductwork and Grilles 38
Duct Collars 38
Location of Supply and Return Grilles 38
General Duct Recommendations 39
Reducing Noise from the Unit 39
Installing the Condensate Drain Connection 40
Installing the Drain Line 40
Priming the Drain Trap 40
Wiring the Fan Coil Unit for Power 41
Installing the Condensing Unit 42
Installation of Interconnecting Refrigerant Lines (Suction and Liquid) 42
Split System Interconnecting Line Sizing Chart 43
Sample Piping Configurations 45
Leak Checking and Evacuation Process 46
Wiring 46
Refrigerant Charging 48

Determining the amount of charge 48
Procedures for Charging System with Head Pressure Control 48
Superheat 50
Sub-Cooling 50
System charging amount 50
Split System Operations Chart 51

Installing the Thermostat and Communication Cable 54
Controller Specification 55
Mounting the Remote Interface Controller (Wired) 56
Mounting the Remote Interface Controller (Wireless) 57
Installation of the Wine Guardian Remote Sensor 58
Mounting the Wired Remote Sensor (Wired) 58
Mounting the Remote Sensor (Wireless) 60
Remote Sensor Pairing Instructions –Multiple Sensors (Wireless) 61
Standard Controller Functions 62
Alarm Codes 69
Inspection and Start Up Checklists 71
Receiving and Inspecting 71
Handling and Installing 71
Starting-up the Unit 71
WG Split System Start-up checklist 72
Starting-up and Operating the Wine Guardian Split System 74
Turn on the Unit 74
Testing the Fan 74
Running the Unit 74
Cycling the Unit 75
Setting the Remote Interface Controller 75
Regulating the Wine Cellar Temperature 75
Changing the Air Flow Direction 75
Maintenance 76
General 76
Cleaning the Condensate Drain System 77
Cleaning the Humidifier 77
Heating Coil Option 77
Maintenance Schedule 78
Monthly 78
Yearly 78
Troubleshooting 79

Typical start up problems 79
Unit does not start up 79
Unit is operating and blows evaporator air but the supply air is not colder than the return air from the cellar 80
Humidity Issues 81
Too low, without optional humidifier 81
Humidity too low, with optional humidifier 81
Humidity too high when unit is running but not cooling 81
Humidity too high when unit is not running 81
Humidity too high when unit is running and cooling 81
Unit operates but the power switch light is not ON 82
Unit is leaking water 82
Unit is running properly, but the sound of the unit objectionable 82
High Pressure Switch has Shut the Unit Down 82
Instructions to Reset High Pressure Switch 82
Advanced Troubleshooting 83
Evaporator Coil is Freezing 83
Unit cycles on and off more than 8 times/hr 83
Replacing the blowers 83
Contact and Warranty Information 84
Warranty 85

Note: This equipment has been tested and found to comply with the limits for a Class B digital device, pursuant to part 15 of the FCC Rules. These limits are designed to provide reasonable protection against harmful interference in a residential installation. This equipment generates, uses and can radiate radio frequency energy and, if not installed and used in accordance with the instructions, may cause harmful interference to radio communications. However, there is no guarantee that interference will not occur in a particular installation. If this equipment does cause harmful interference to radio or television reception, which can be determined by turning the equipment off and on, the user is encouraged to try to correct the interference by one or more of the following measures:

- Reorient or relocate the receiving antenna.
- Increase the separation between the equipment and receiver.
- Connect the equipment into an outlet on a circuit different from that to which the receiver is connected.
- Consult the dealer or an experienced radio/TV technician for help.

RSS GEN (English)
This device contains licence-exempt transmitter(s)/receiver(s) that comply with Innovation, Science and Economic Development Canada's licence-exempt RSS(s). Operation is subject to the following two conditions:

1. This device may not cause interference.
2. This device must accept any interference, including interference that may cause undesired operation of the device.

RSS GEN (French)
L'émetteur/récepteur exempt de licence contenu dans le présent appareil est conforme aux CNR d'Innovation, Sciences et Développement économique Canada applicables aux appareils radio exempts de licence. L'exploitation est autorisée aux deux conditions suivantes :

1. L'appareil ne doit pas produire de brouillage;
2. L'appareil doit accepter tout brouillage radioélectrique subi, même si le brouillage est susceptible d'en compromettre le fonctionnement.

Directory of Terms

Ambient Air – The surrounding area outside the wine cellar such as a room, basement, garage or outdoors.

BTU/H – British thermal units/hour. A unit of measurement to describe the power of heating and cooling system.

CFM – Cubic feet per minute. A unit of measurement for the amount of air handled by the fan.

Condensate / Condensation – The water formed out of the air when it is cooled below a certain temperature (called dew point). Often referred to as "sweating" on pipes and cold surfaces. This water collects at the bottom of the evaporator or cooling coil and drains out of the unit through the drain line.

Condensing Unit (Heat Rejection) – The condensing unit uses the compressor, condenser coil and fan to remove heat from the refrigerant to the ambient air *outside* the wine cellar. The word condenser refers to the condensation of the refrigerant from gas to liquid phase.

CSA/ETL – Canadian Standards Association/Edison Testing Laboratory (product compliance to safety standards)

F – (Degrees) Fahrenheit

Fan Coil Unit (Evaporator Cooling) – The fan coil unit uses the cooling coil and the fan to remove heat from the air *inside* the wine cellar to the refrigerant, cooling the air and condensing moisture out of the air. The word evaporator refers to the evaporation of the refrigerant from liquid to gas phase in the coil. The fan coil unit is ducted to or can be placed inside the wine cellar.

Flexible Duct – Round ducts with steel reinforced plastic liners, a layer of insulation and an outer plastic layer used to convey the air from the unit to the wine cellar or ambient space.

Grille or Diffuser – Inlet or outlet plates to direct the airflow or protect the inside of the unit.

Heat Gain / Loss – The amount of cooling or heating expressed in watts transferred between the wine cellar and the ambient space. The Wine Guardian must offset this heat/gain loss.

Inlet Air – The air returning from the wine room to the Wine Guardian fan coil.

I.D. – Inside diameter

NEC – National Electrical Code

O.D. – Outside diameter

Psig Pounds – Force per square inch gauge

Recovery – The amount of cooling the unit does to return the cellar to its set point temperature after some new heat load is introduced, such as people or new cases of warm wine entering the cellar.

Return Air - The air leaving the cellar and returning to the inlet of the fan coil. (See Inlet Air above)

TXV – Thermal expansion valve

VAC – Volts alternating current

SP – Static pressure. Unit of measurement (inches of water column) of the pressure of the air handled by the fan.

Set Point – The desired temperature or humidity set on the remote interface controller or humidistat.

Supply Air - The air entering the wine cellar from the discharge of the fan coil.

Receiving, Inspecting and Unpacking the Wine Guardian Unit

IMPORTANT
This appliance is not intended for use by persons (including children) with reduced physical, sensory or mental capabilities, or lack of experience and knowledge, unless they have been given supervision or instruction concerning use of the appliance by a person responsible for their safety.
Children should be supervised to ensure that they do not play with the appliance.

NOTE: Wine Guardian units are factory assembled and tested prior to shipment. The Wine Guardian Ducted Split System consists of two separate components, the Wine Guardian fan coil and condensing unit.

Each Wine Guardian component is shipped in a corrugated box. A shipment may include one or more boxes containing accessories.

- ✓ Lift at the designated handhold locations only or fully support from underneath.
- ✓ Before opening, inspect the packing crates or boxes for obvious signs of damage or mishandling.
- ✓ Write any discrepancy or visual damage on the bill of lading before signing.
- ✓ Inspect all equipment for any sign of damage caused during transit.
- ✓ Report all visual or concealed damage to the carrier and file a claim immediately.
- ✓ Thoroughly inspect the contents for any visible damage or loose parts.

IMPORTANT
If this procedure is not followed, the shipping company may reject the claim and the consignee may suffer the loss. Do not return the shipment to the factory.

Review the Packing Slip to Verify:

- ✓ Model number
- ✓ Factory installed options
- ✓ Unit accessories

If any items listed on the packing slip do not match your order information, contact the place of purchase immediately.

Check the fan coil unit for:

- ✓ An electrical power cord
- ✓ A remote interface controller with communication cable plugged into side of unit
- ✓ A drain line coming out of the unit
- ✓ One supply duct collar and one return duct collar

Check the condensing unit for:

- ✓ Weather proof enclosure, top and sides

General Description

IMPORTANT
Design and specifications are subject to change without notice

The Wine Guardian cooling unit is a professional grade, American-manufactured, split two-piece climate control unit designed specifically for the storage of wine at cellar temperatures. It is designed for easy installation and operation. Wine Guardian uses digital electronic controls and R-134a refrigerant. The entire Wine Guardian fan coil section and the condensing unit is tested at the factory. All components are of a high quality standard commercial grade.

The entire system is approved by ETL according to UL 1995 and CSA safety standards. All wiring complies with NEC. Each Wine Guardian fan coil section is furnished with a sealed, UL-approved power cord and plug.

All Wine Guardian 50Hz units carry the CE mark. Each unit is furnished with a sealed, CE- approved power cord.

The Wine Guardian Ducted Split System Contains

1. **A Wine Guardian Fan Coil Unit with**:
   - ✓ A thermal expansion valve to control the flow of refrigerant into the evaporator coil
   - ✓ A built-in condensate drain trap. No external trap is required.
   - ✓ A removable control panel for ease of service
   - ✓ Supply duct collar
   - ✓ Return duct collar
   - ✓ Remote interface controller and control cable

2. **A Condensing Unit with**:
   - ✓ A filter dryer to keep the refrigerant clean and free of contaminants
   - ✓ A sight glass to observe the level of refrigerant
   - ✓ A manual reset high pressure switch on the discharge to protect the compressor from high pressures.
   - ✓ Auto reset low pressure switch
   - ✓ 24-volt contactor for control of fan coil unit
   - ✓ Outdoor enclosure
   - ✓ Crankcase heater
   - ✓ Low ambient refrigeration controls (see page 11 for Xtreme Low Ambient option)

Wine Guardian Fan Coil Unit

The Wine Guardian fan coil unit meets its rated capacities for total BTU/H and CFM (watts and M^3/h for 50Hz) at design cellar conditions and external static pressures. The fan coil unit is capable of rated CFM (M^3/h for 50Hz) against the static pressure imposed by recommended ductwork. The fan is a motorized impeller type, statically and dynamically balanced, and uses permanently lubricated direct drive motors requiring no maintenance.

The Wine Guardian fan coil section operates as air passes through the cooling coil and is cooled by the refrigerant inside the coil. This causes any excess humidity in the air to condense and be captured in the drain pan and piped outside the unit. Air then enters the fan where it is pressurized and discharged out of the unit through one of five openings. Optional heating coils are located between the cooling coil and the fan. These coils heat the air to prevent low temperatures in the cellar.

All exterior framing of the Wine Guardian is powder coated 0.063-inch gauge aluminum to prevent rust and corrosion. All coils are aluminum tubes, aluminum fins to protect against premature corrosion. The unit uses an external drain to remove excess moisture and not reintroduce it into the cellar or ambient space. Removable, multiple access doors are provided to facilitate cleaning and maintenance, duct connections, and access to components and wiring. The fan coil has at least five discharge outlets to facilitate custom installations.

Each unit is provided with a pre-wired and tested remote interface controller for remote mounting within the wine cellar. The remote interface controller has multiple control functions for cooling, heating and operation. It has a fully automatic mode to switch between heating and cooling.

Electrical Controls

The main electrical control board and components are located on a separate panel accessible through a side door panel or by removal of the on/off panel from the system chassis. All wiring is in accordance with the NEC. Wires are numbered and color coded to match the wiring diagrams.

Electric power is supplied by a single factory-furnished cord and plug. All external controls are digital and proprietary to Wine Guardian products. Only approved communication cable (RJ-9) and Wine Guardian controllers are suitable for proper system operation.

Condensing Unit

Compressors are self-lubricating, permanently sealed, hermetic reciprocating-type compressors, with internal overload protection and capacitor start. The condensing unit includes a two-year warranty. Compressors are mounted on rubber-in-shear isolators to reduce noise and vibration. Additional features include a liquid line filter drier, Sporlan Head Master Controls, a liquid line receiver and refrigerant sight glass. Each unit is housed in a painted aluminum enclosure suitable for outdoor installation. The outdoor enclosure has adequate area for ventilation and refrigerant piping penetrations.

All units come factory-configured with low-ambient protection for exposure to cold weather. This feature controls the system pressures to prevent evaporator coil freezing (based on head pressure) and heats the compressor coil reservoir.

IMPORTANT
The air exhaust from the condensing unit is hot and will be 25 to 35 degrees F or 15°C to 20°C above the entering temperature. The condensing units are rated for a maximum temperature of 115 degrees F(46°C). The condensing units should be installed in a well-ventilated area to ensure proper air flow across the condenser coil and to limit short cycling.

Accessories and Optional Equipment

Condensate Pump (Part # 94H0018-00)

An optional Wine Guardian automatic condensate pump is available to pump the water to a remote sink, drain pipe or outside. It requires a separate 120-volt electrical outlet. 50Hz models require a separate 220/240-volt electrical outlet.

Duct Collars and Flexible Ducts

Ducting for the Wine Guardian is sold in kits by size for each unit. Each kit contains two adapter collars, one 25-foot (7.6 meters) length of round flexible duct and two straps. The number of duct kits needed depends on the wine cellar layout and application. The size of the kit depends on the model Wine Guardian selected. Follow installation instructions carefully. Poorly or incorrectly installed ducts can degrade the performance of your unit dramatically.

Extended Compressor Warranty

The Wine Guardian uses only the best commercially available compressors on the market. However, since the compressor is the single most expensive component in the unit, it is recommended that you purchase the extended warranty option.

Heating Coils

An optional heating coil is built in and requires no additional power source. The electric heating option is factory installed and includes primary and secondary over-temperature protection devices per UL and NEC.

Humidifier

Another popular option for the Wine Guardian is a humidifier. The humidifier is available for split system installation and can be retrofitted onto any existing Wine Guardian unit. Each humidifier is furnished with a power cable connection to plug into the side of the Wine Guardian fan coil unit. It is then controlled by the same remote interface controller that is used for the operation of the Wine Guardian unit. The humidifier mounts directly onto the Wine Guardian unit and requires a water supply and drain for operation.

CAUTION

CAREFULLY FOLLOW THE INSTALLATION INSTRUCTIONS INCLUDED WITH THE HUMIDIFIER. REFER TO THE INSTRUCTIONS CONTAINED IN THE BOX FOR THE HUMIDISTAT.

Xtreme Low Ambient (see illustrations on following page)

The Xtreme Low Ambient options consists of factory installed refrigeration controls mounted within the condensing unit for continuous operation of the Wine Cellar cooling unit below a temperature of 20 Deg F (-7 Deg C). Included in the refrigeration controls are;

- Check valve – installed in the liquid line between the head pressure control valve and receiver
- Fan cycling switch
- Heater – for the receiver with thermostat control
- Adjustable low-pressure cutout timer.

Xtreme Low Ambient Illustrations

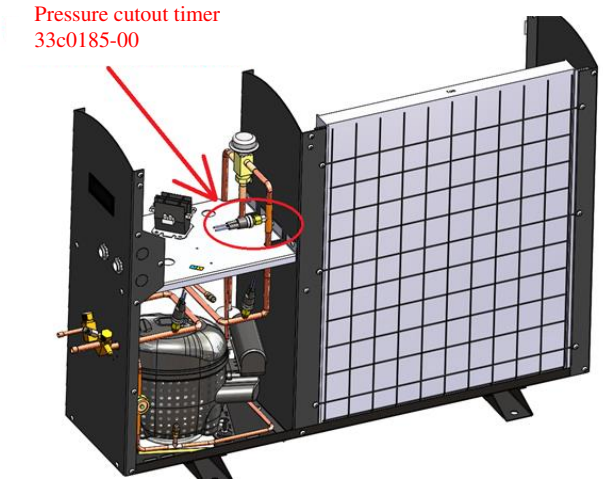

Fig. 1

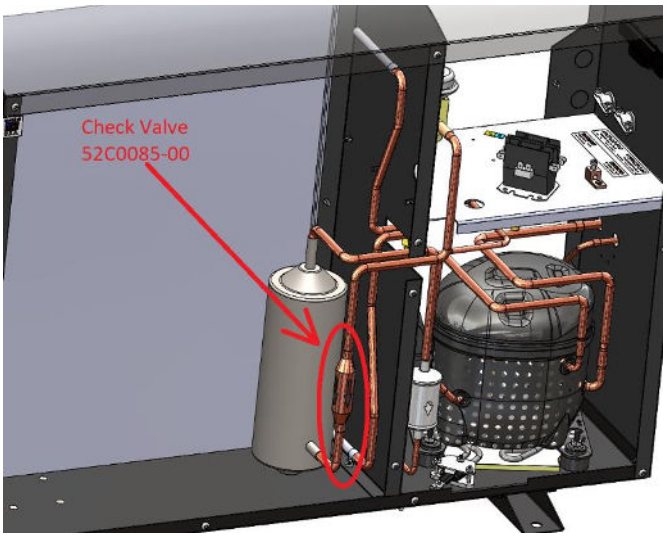

Fig. 2

Overview of the Wine Guardian fan coil

Fig. 1

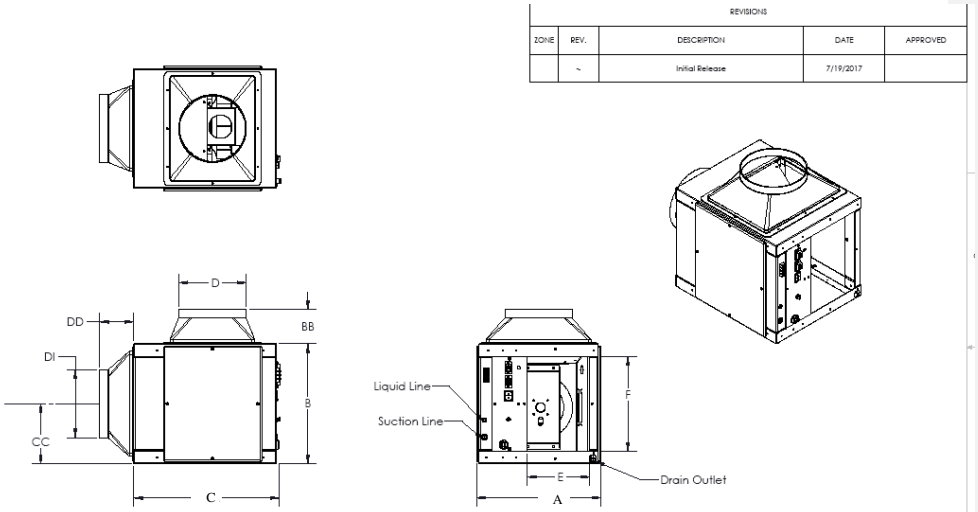

Wine Guardian dimension for split ducted systems DS025, WGS40, DS050, WGS75, DS088, WGS100, DS200, and WGS175

See diagram on next page for the condensing unit

Model Number	DS025 -WGS40 (60Hz)	DS050/WGS75 (50Hz)	DS088/WGS100	DS200/WGS175
	Inches / cm	**Inches / cm**	**Inches / cm**	**Inches / cm**
A – Width	14.00 / 35.60	22.00 / 55.88	22.00 / 55.88	22.38 / 56.85
B – Height	14.13 / 35.56	14.13 / 35.56	14.13 / 35.56	18.00 / 45.72
C – Length	16.75 / 42.55	16.75 / 42.55	16.75 / 45.55	20.50 / 52.07
D – Evap. Discharge (OD)	7.93 / 20.20	9.94 / 25.24	9.94 / 25.24	11.94 / 30.33
DI – Evap. Inlet (OD)	7.94 / 20.10	9.94 / 25.24	9.94 / 25.24	11.94 / 30.33
E – Outlet opening width	9.90 / 25.15	10.00 / 25.40	10.00 / 25.40	11.63 / 29.54
F - Outlet opening height	11.13 / 28.27	11.13 / 28.27	11.13 / 28.27	15.00 / 38.10
G – Drain outlet location	0.66 / 1.68	0.92 / 2.34	0.92 / 2.34	0.85 / 2.16
AA – Discharge opening height	7.50 / 19.05	7.50 / 19.05	7.50 / 19.05	9.19 / 23.34
BB – Discharge opening width	7.00 / 17.78	11.00 / 27.94	11.00 / 27.94	11.19 / 28.42
CC – Inlet opening height	7.06 / 17.93	7.06 / 17.93	7.06 / 17.93	9.00 / 22.86
DD – Inlet opening width	7.00 / 17.78	11.00 / 27.94	11.00 / 27.94	11.19 / 28.42
CH – Condenser Height	26.07 / 66.22	26.07 / 66.22	26.07 / 66.22	26.07 / 66.22
CL – Condenser Length	12.30 / 31.24	12.30 / 31.24	12.30 / 31.24	12.30 / 31.24
CW – Condenser Width	34.00 / 86.36	34.00 / 86.36	34.00 / 86.36	34.00 / 86.36

Condensing unit dimensions

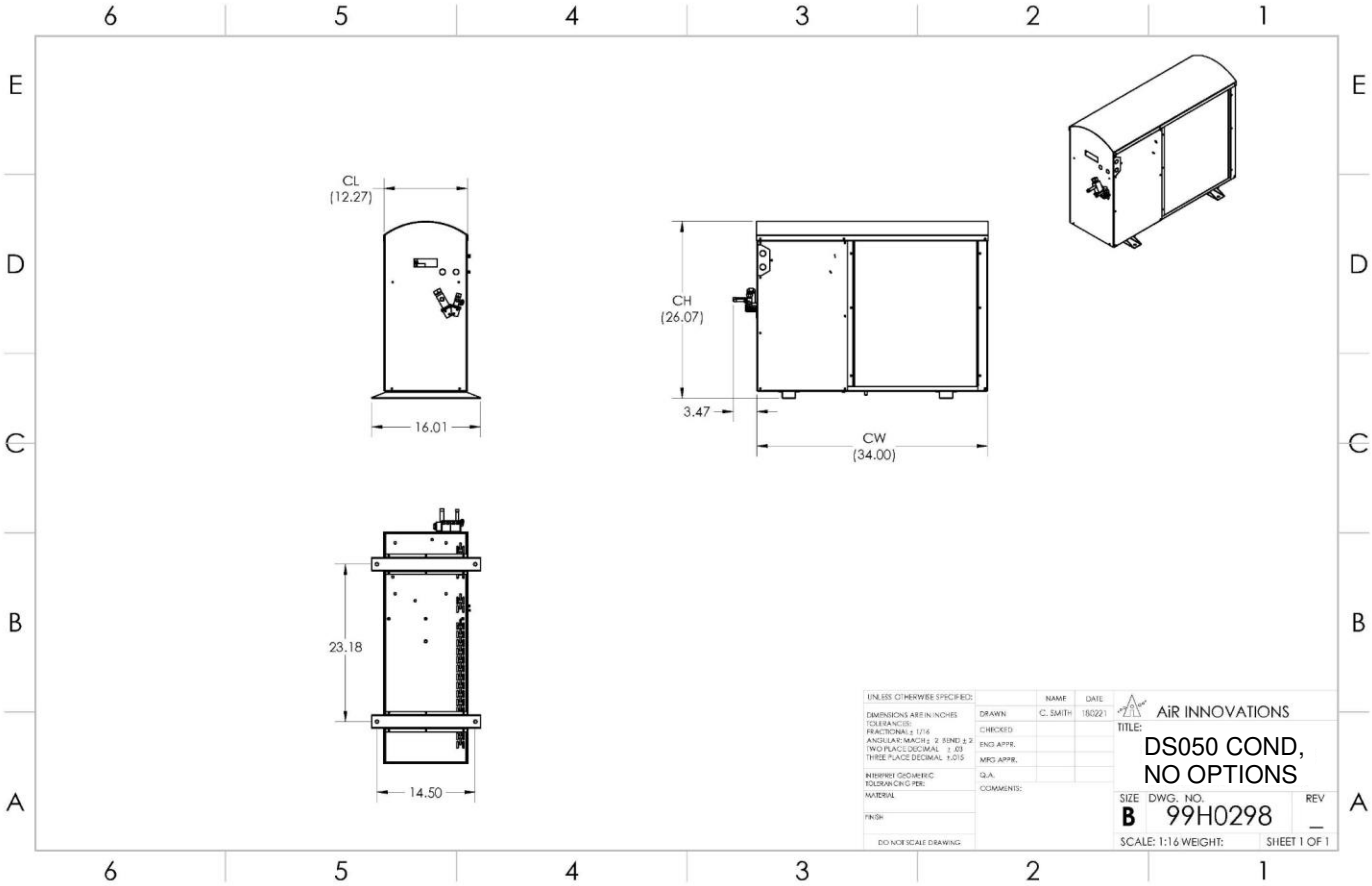

Refrigeration Illustration of the system

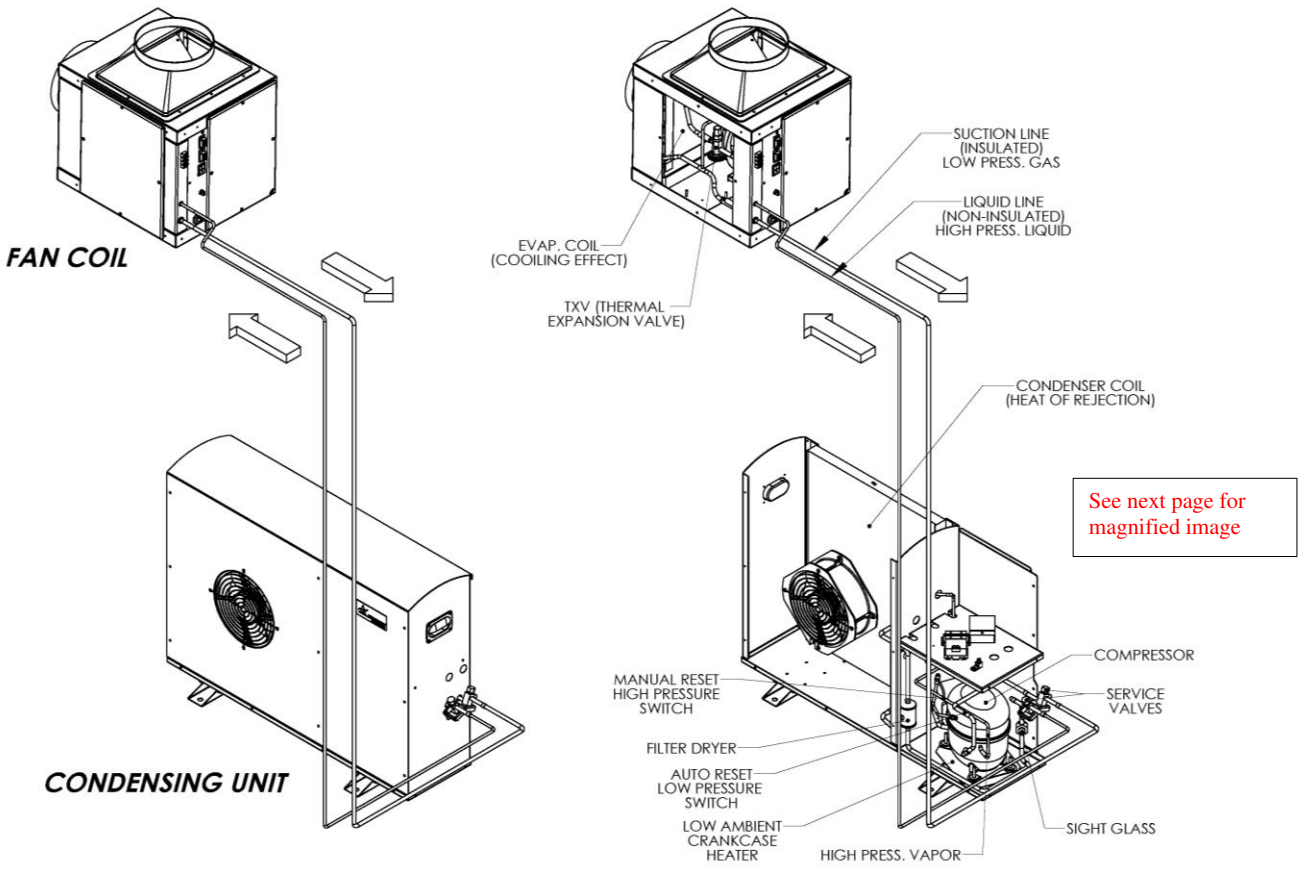

See next page for magnified image

Magnified Image of the Condensing Unit

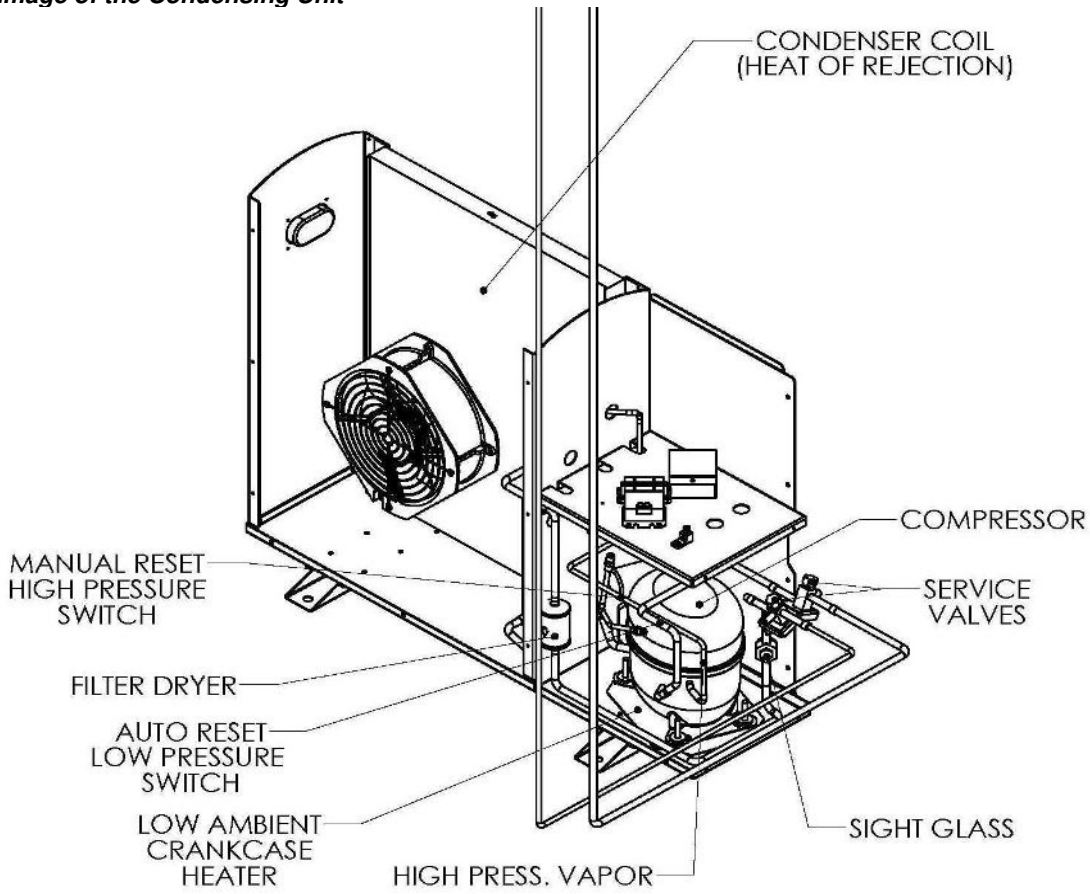

Wiring Diagram for DS025, DS050, WGS40, & WGS75

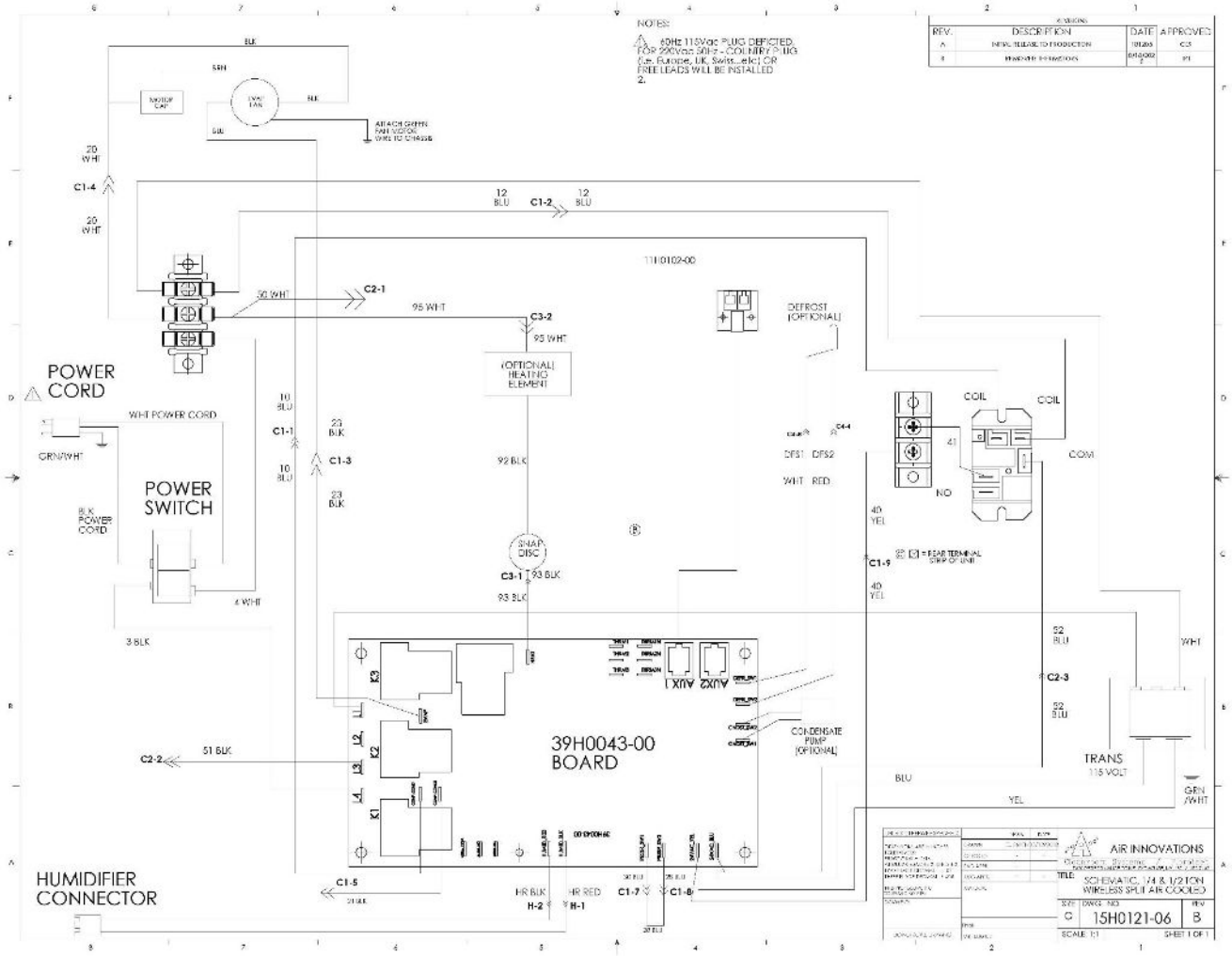

Wiring Diagram for DS088 and WGS100

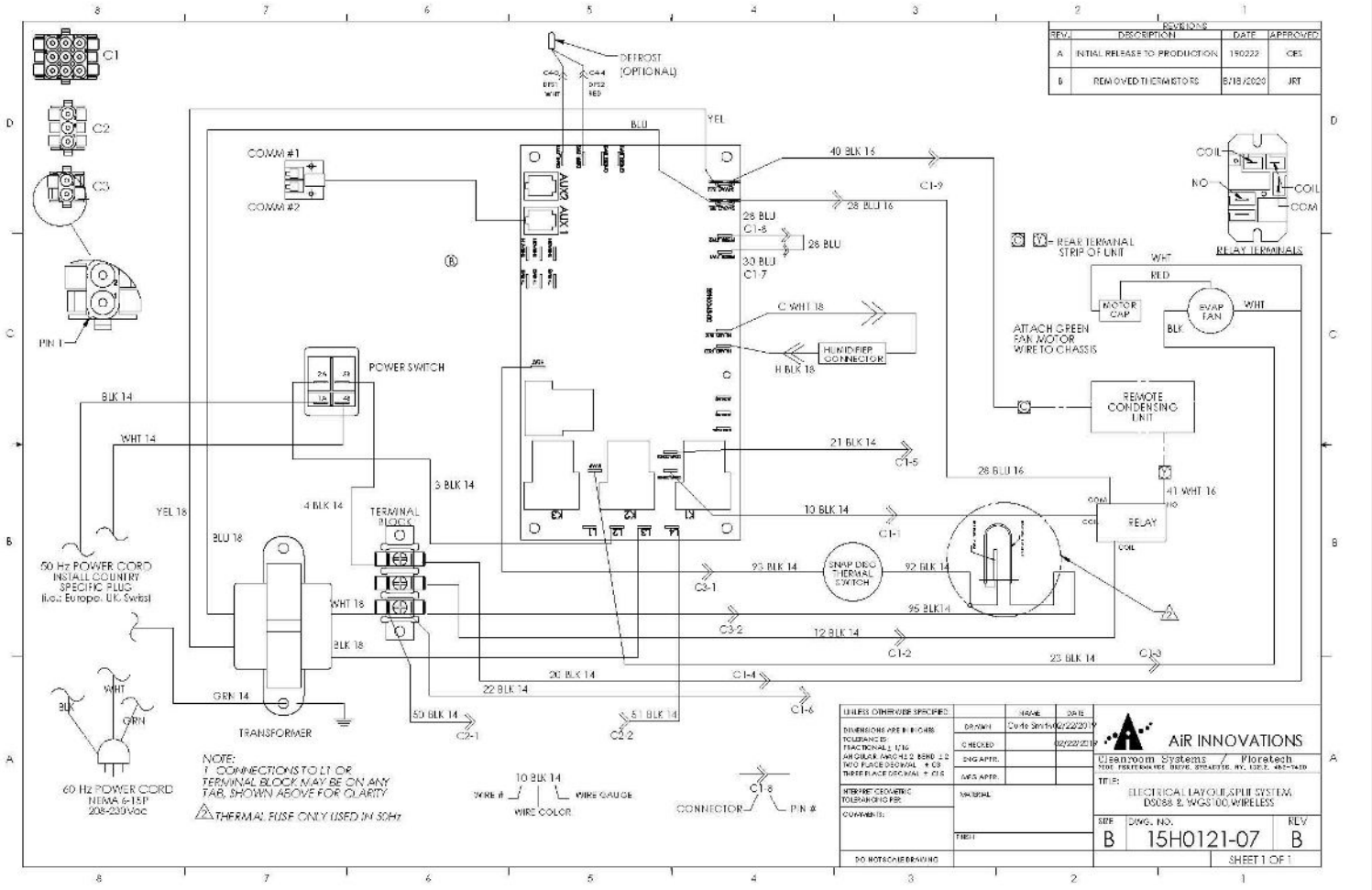

Wiring Diagram for DS200 and WGS175 Units

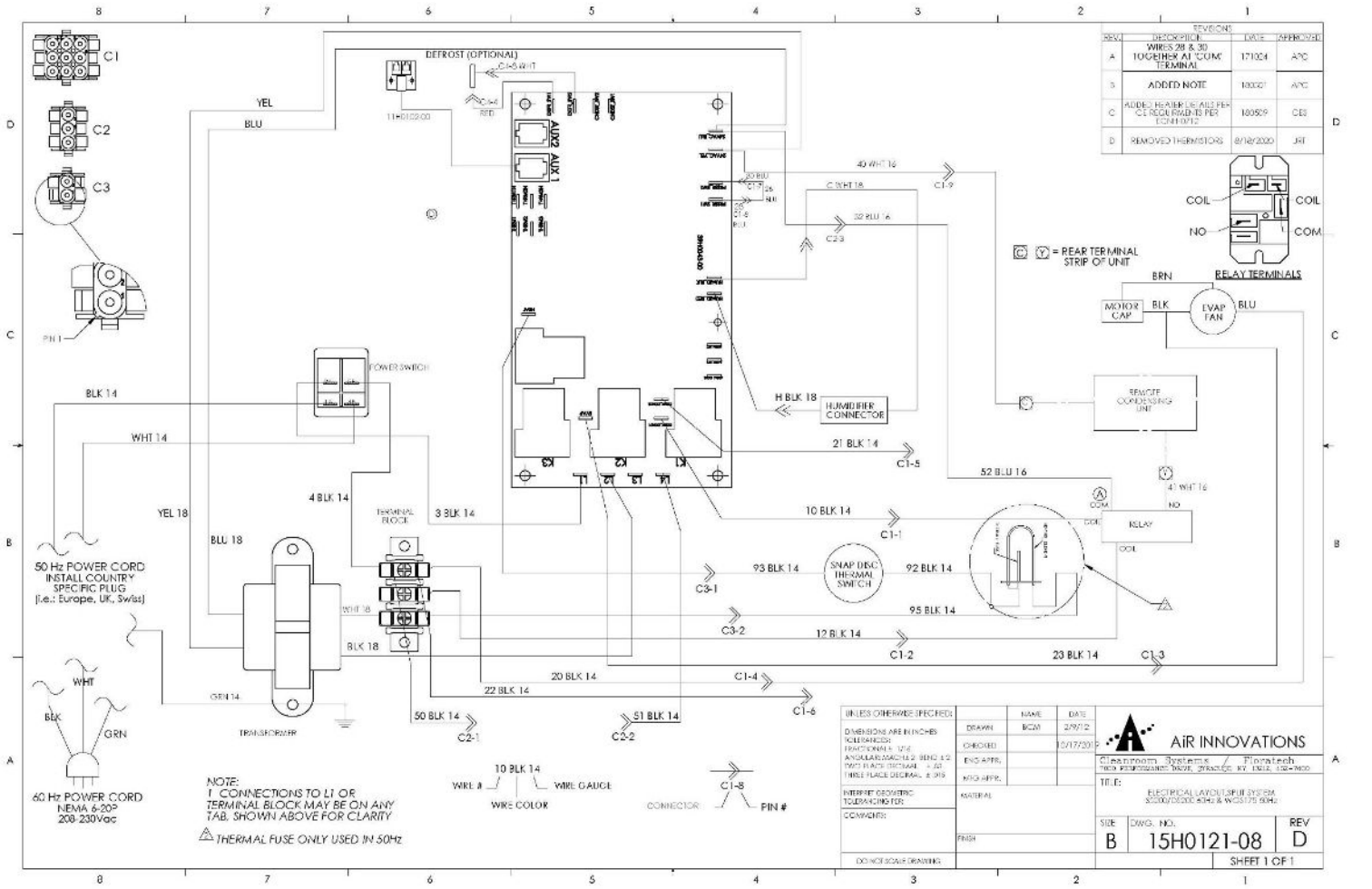

Wiring Diagram for Replacement Fan Motor (XR 115/230 Models)

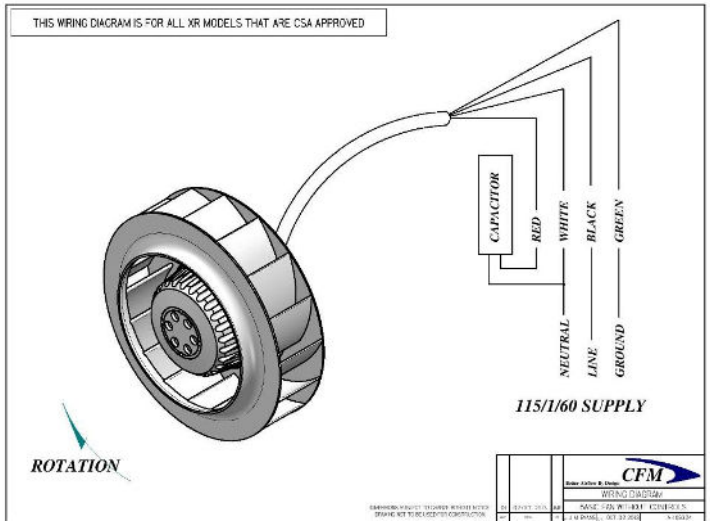

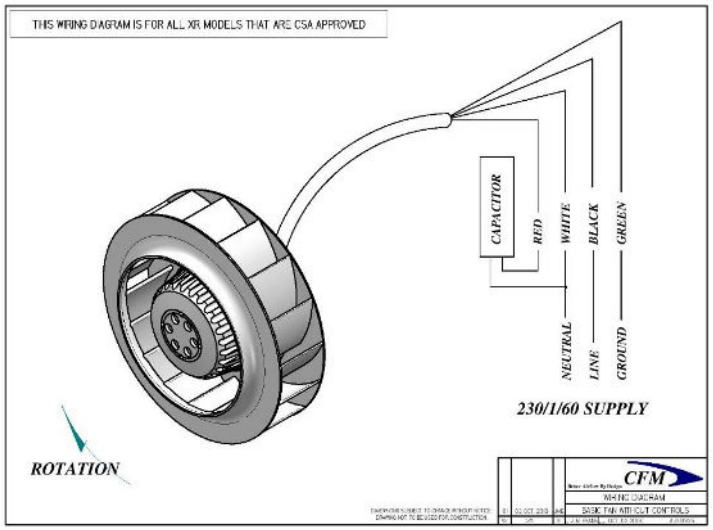

Wiring Diagram for DS025 and WGS40 Condensing Unit

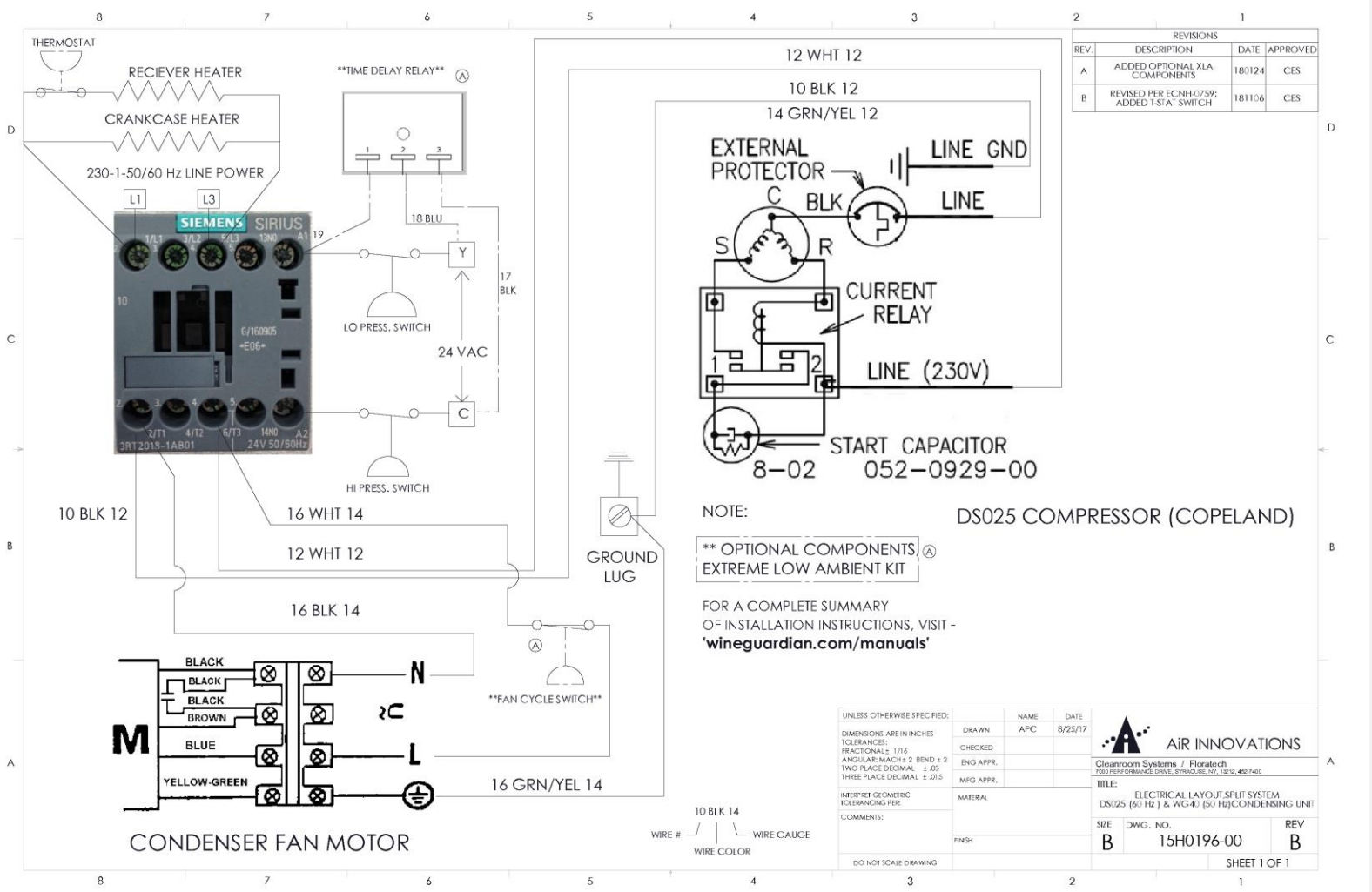

Wiring Diagram for DS050 and WGS75 Condensing Unit

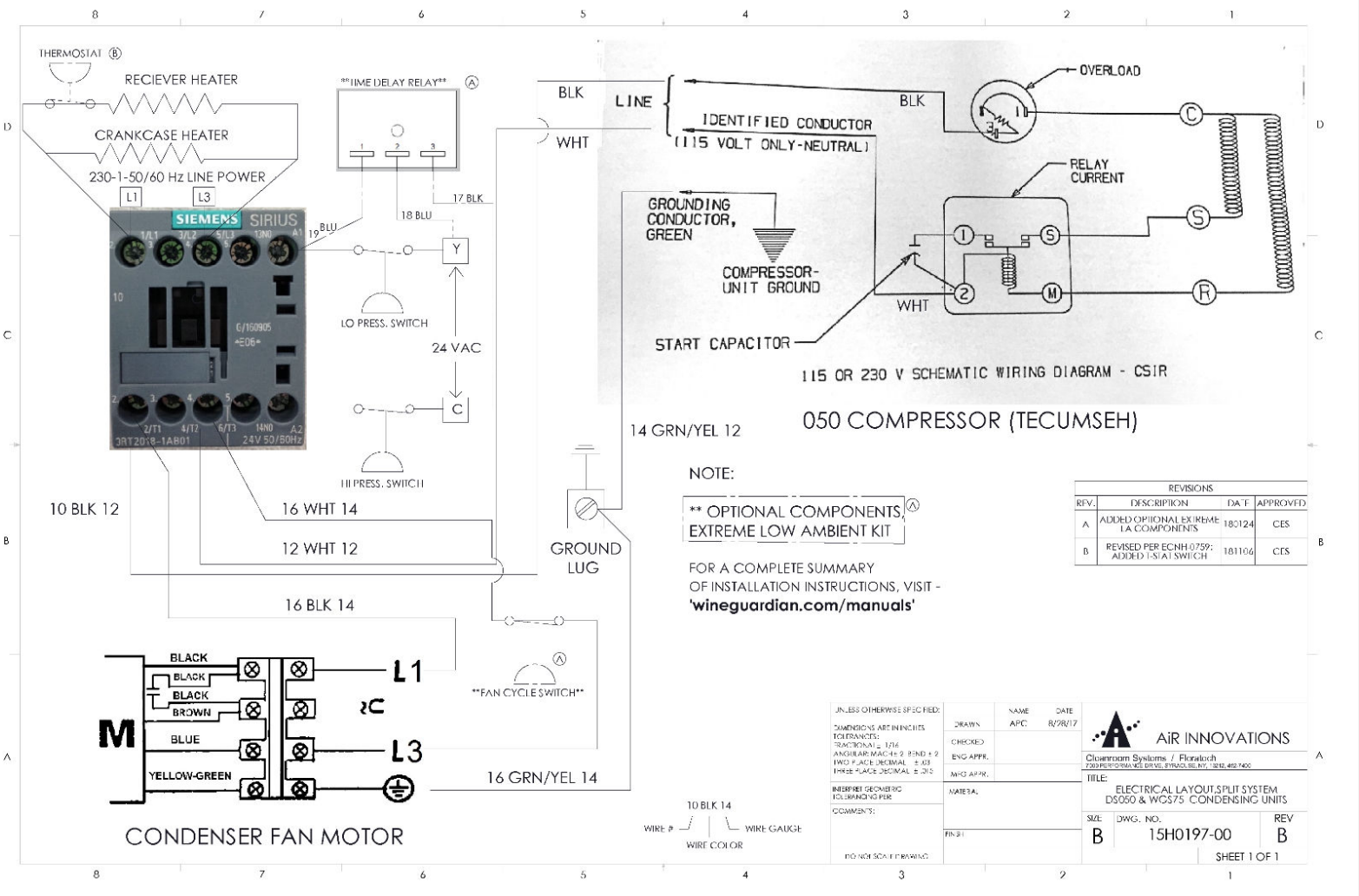

Wiring Diagram for DS088 and WGS100 Condensing Unit

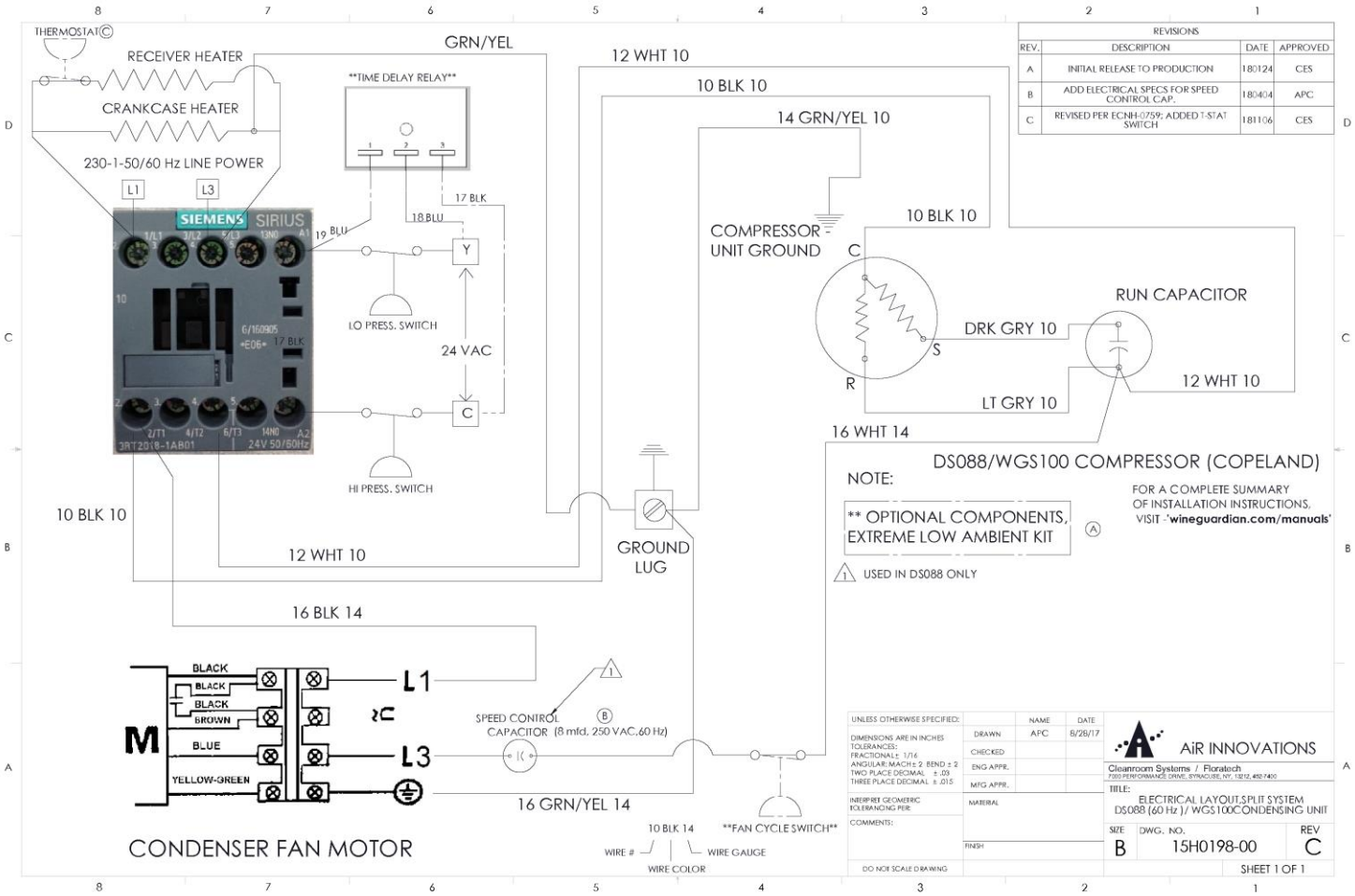

Wiring Diagram for DS200 and WGS175 Condensing Unit

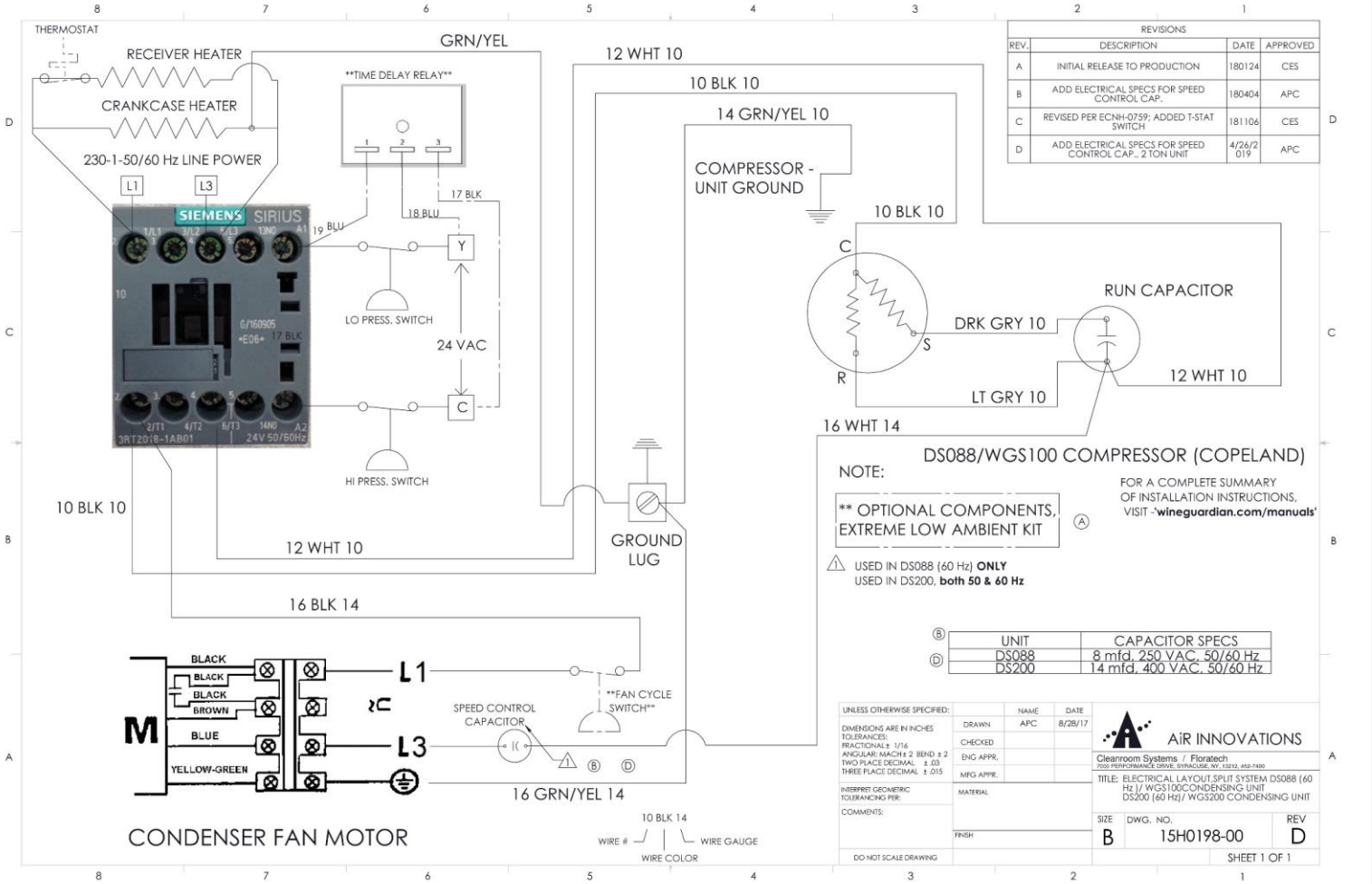

Ducted Split Systems Specifications - 60Hz Models DS025, DS050, DS088, DS200

SPECIFICATIONS

WINE GUARDIAN

Ducted Split System

Model Number	***DS025***	***DS050***	***DS088***	***DS200***
Performance				
Net Cooling * Total Sensible	Total/Sensible @208-230V	Total/Sensible @208-230V	Total/Sensible @208-230V	Total/Sensible @208-230V
@10°F (minus 12°C) condenser inlet air	4100/3178 BTUH	5535/4203 BTUH	10763/8610 BTUH	N/A
@40°F (4°C) condenser inlet air	3793/3178 BTUH	6458/5023 BTUH	10865/8815 BTUH	17118/11173 BTUH
@60°F (15°C) condenser inlet air	3485/3075 BTUH	6765/5330 BTUH	10455/8405 BTUH	17425/11173 BTUH
@70°F (21°C) condenser inlet air	3690/3075 BTUH	6663/5125 BTUH	10353/7893 BTUH	16195/10968 BTUH
@80°F (27°C) condenser inlet air	3485/3178 BTUH	6458/5023 BTUH	9840/7688 BTUH	15785/10455 BTUH
@100°F (32°C) condenser inlet air	3178/2768 BTUH	5740/4510 BTUH	9225/7073 BTUH	14145/9738 BTUH
@115°F (46°C) condenser inlet air	2973/2563 BTUH	5125/3793 BTUH	8713/6663 BTUH	12608/8815 BTUH
@122°F (50°C) condenser inlet air	2460/2460 BTUH	4818/3485 BTUH	N/A	N/A
Controls				
Type	Room mounted non-programmable combination thermostat humidistat			
Temperature Accuracy/RH% Accuracy	+/- 1 Deg F / +/- 10% RH			
Fan-coil Section				
Fan Motor Size	90 Rated Watts	115 Rated Watts	220 Rated Watts	180 Rated Watts
Rated Air Flow (free blow)	236 CFM	410 CFM	482 CFM	759 CFM
Rated Air Flow @ Max allow pressure loss	226 @ 0.10"wc / CFM	359 @ 0.20" wc / CFM	457 @ 0.20" wc / CFM	728 CFM @ 0.35" wc / CFM
Heat (Option)				
Type	Electic	Electric	Electric	Electric
Capacity	1000 Watts	1000 Watts	2000 Watts	2000 Watts
Humidifier (Option)				
Type	Removeable drip pad with integral fan			
Capacity - water temp of 60°F (15°C)	0.42 lbs/hr			
Capacity - water temp of 90°F (32°C)	0.97 lbs/hr			
Capacity - water temp of 120°F (49°C)	1.11 lbs/hr			
Electrical Requirements - Evaporator Section				
Power	115 Volts/1 phase/60Hz	115 Volts/1 phase/60Hz	208-230Volts/1 phase/60Hz	208-230Volts/1 phase/60Hz
Current Draw - Cooling mode	0.8 Amps	0.9 Amps	0.8 Amps	0.8 Amps
Current Draw - Heating mode	9.4 Amps	9.6 Amps	9.5 Amps	9.5 Amps
Minimum Circuit Size (w/heat option)	11.6Amps	11.8 Amps	11.7 Amps	11.7 Amps
Optional Humidifier	0.3 Amps	0.3 Amps	0.3 Amps	0.3 Amps
Cabinet - Evaporator Section				
Fan coil construction	Aluminum			
Finish	Black - textured epoxy powder coat			
Weight	25 lbs	35 lbs	37 lbs	56 lbs
Length	16¾ inches	16¾ inches	16¾ Inches	20¾ inches
Width	14 inches	22 inches	22 inches	23 inches
Height	14¼ inches	14¼ inches	14¼ inches	18 inches
Condensate Drain	0.5 inches	0.5 inches	0.5 inches	0.5 inches
Condensing Unit	***DS025 Cond***	***DS050 Cond***	***DS088 Cond***	***DS200 Cond***
Nominal Compressor	3.1 Amps	4.8 Amps	11.3 Amps	11.3 Amps
Fan Motor Size	75 Watts	75 Watts	150 watts	150 watts
Rated Air Flow (free blow)	275 CFM	375 CFM	420 CFM	875 CFM
Weight	75 lbs	76 lbs	96 lbs	120 lbs
Enclosure - Condensing Unit				
Construction	Aluminum	Aluminum	Aluminum	Aluminum
Finish	Anodized	Anodized	Anodized	Anodized
Width	12 inches	12 inches	12 inches	12 inches
Length	34 inches	34 inches	34 inches	34 inches
Height	26 inches	26 inches	26 inches	26 inches
Electrical Requirements - Condensing Unit				
Power	208/230 Volts/1 Phase/60Hz	208/230 Volts/1 Phase/60Hz	208-230 Volts/1 Phase/60Hz	208-230 Volts/1 Phase/60Hz
MCA	4.2 Amps	6.4 Amps	14.9 Amps	24.4 Amps
MOP	8.0 Amps	10.0 Amps	25 Amps	40 Amps
Agency Approval(s)	ETLc	ETLc	ETLc	ETLc

1. Net cooling capacity at entering temperature and humidity conditions of 57 Deg F (14 Deg C) and 55% RH at rated airflow. Reduce capacity by 3% for each 10% reduction in evaporator airflow.

2. Wine Guardian reserves the right to make changes to this document without prior notice at its sole discretion.

3. All ratings at sea level.

4. All btuh capacity and airflow (CFM) values shown are at tested 230v applied on 208/230v rated units (Condensing units and larger evaporators). If field application allows 208v applied to the units dual rated, you can generally expect 2.5%-3.0% decreases in values shown.

7000 Performance Drive | North Syracuse, New York 13212 USA
800-825-3268 | 315-452-7420 | Fax 315-452-7420 | www.wineguardian.com | info@wineguardian.com

Rev. 08/2019

Ducted Split System Specifications – 50 Hz Models WGS40, WGS75, WGS100, WGS175

SPECIFICATIONS

WINE GUARDIAN

Ducted Split Systems - 50Hz

Model Number	***WGS40***	***WGS75***	***WGS100***	***WGS175***
Performance				
Net Cooling * Total Sensible	Total/Sensible @220-2400V	Total/Sensible @220-240V	Total/Sensible @220-240V	Total/Sensible @220-240V
@10°F (minus 12°C) condenser inlet air	1140/879 Watts	1600/1300 Watts	2960/2315 Watts	
@40°F (4°C) condenser inlet air	1140/937 Watts	1780/1460 Watts	2930/2285 Watts	4520/3230 Watts
@60°F (15°C) condenser inlet air	1115/860 Watts	1715/1440 Watts	3077/2256 Watts	4530/2970 Watts
@70°F (21°C) condenser inlet air	1110/850 Watts	1750/1380 Watts	2930/2168 Watts	4420/3000 Watts
@80°F (27°C) condenser inlet air	1055/835 Watts	1550/1310 Watts	2813/2110 Watts	4100/2880 Watts
@100°F (32°C) condenser inlet air	965/730 Watts	1360/1150 Watts	2520/1846 Watts	3900/2720 Watts
@115°F (46°C) condenser inlet air	850/675 Watts	1300/1080 Watts	2373/1758 Watts	3490/2440 Watts
@122°F (50°C) condenser inlet air	640/640 Watts	1200/1000 Watts		
Controls				
Type	Room mounted non-programmable combination thermostat humidistat			
Temperature Accuracy/RH% Accuracy	+/- 1 Deg F / +/- 10% RH			
Fan-coil Section				
Fan Motor Size	85 Rated Watts	120 Rated Watts	230 Rated Watts	290 Rated Watts
Rated Air Flow (free blow)	390 M^3h	680 M^3h	N/A	1325 M^3h
Rated Air Flow @ Max allow pressure loss	374 M^3h	630 M^3h	750 M^3h	1200 M^3h
Heat (Option)				
Type	Electric	Electric	Electric	Electric
Capacity	1000 Watts	1000 Watts	2000 Watts	2000 Watts
Humidifier (Option)				
Type	Removeable drip pad with integral fan			
Capacity - water temp of 60°F (15°C)	.19 kg/hr			
Capacity - water temp of 90°F (32°C)	.44 kg/hr			
Capacity - water temp of 120°F (49°C)	0.5 kg/hr			
Electrical Requirements - Evaporator Section				
Power	220-240Volts/1 phase/50Hz	220-240Volts/1 phase/50Hz	220-240Volts/1 phase/50Hz	220-240Volts/1 phase/50Hz
Current Draw - Cooling mode	0.4 Amps	0.5 Amps	1.0 Amps	1.0 Amps
Current Draw - Heating mode	4.75 Amps	4.70 Amps	10.7 Amps	10.7 Amps
Minimum Circuit Size (w/heat option)	5.84 Amps	5.75 Amps	13.1 Amps	13.1 Amps
Optional Humidifier	0.3 Amps	0.3 Amps	0.3 Amps	0.3 Amps
Cabinet - Evaporator Section				
Fan coil construction	Aluminum			
Finish	Black - textured epoxy powder coat			
Weight	11.3 kg	16 kg	17 kg	25 kg
Length	42.5 cm	42.5 cm	42.5 cm	53 cm
Width	35.5 cm	56 cm	56 cm	58.4 cm
Height	36.2 cm	36.2 cm	36.2 cm	45.7 cm
Condensate Drain	12.7 mm	12.7 mm	12.7 mm	12.7 mm
Condensing Unit	***WGS40 Cond***	***WGS75 Cond***	***WGS100 Cond***	***WGS175 Cond***
Nominal Compressor	2.6 Amps	3.9 Amps	10.8 Amps	10.8 Amps
Fan Motor Size	68 Watts	68 Watts	120 Watts	120 Watts
Rated Air Flow (free blow)	850 M^3h	850 M^3h	739 M^3h	1486 M^3h
Weight	34 kg	35 kg	44 kg	54 kg
Enclosure - Condensing Unit				
Construction	Aluminum	Aluminum	Aluminum	Aluminum
Finish	Anodized	Anodized	Anodized	Anodized
Length	86.4 cm	86.4 cm	86.4 cm	86.4 cm
Width	30.5 cm	30.5 cm	30.5 cm	30.5 cm
Height	66 cm	66 cm	66 cm	66 cm
Electrical Requirements - Condensing Unit				
Power	220-240 Volts/1 Phase/50Hz	220-240 Volts/1 Phase/50Hz	220-240 Volts/1 Phase/50Hz	220-240 Volts/1 Phase/50Hz
MCA	3.7 Amps	5.2 Amps	14.2 Amps	14.2 Amps
MOP	6.0 Amps	9.0 Amps	20 amps	20 amps
Agency Approval(s)	CE	CE	CE	CE

1. Net cooling capacity at entering temperature and humidity conditions of 57 Deg F (14 Deg C) and 55% RH at rated airflow. Reduce capacity by 3% for each 10% reduction in evaporator airflow.

2. Wine Guardian reserves the right to make changes to this document without prior notice at its sole discretion.

3. All ratings at sea level.

7000 Performance Drive | North Syracuse, New York 13212 USA
800-825-3268 | 315-452-7420 | Fax 315-452-7420 | wineguardian.com | info@wineguardian.com

Rev. 09/2019

Safety

IMPORTANT
The equipment described in this manual uses electricity. When using this equipment, be sure to follow the safety procedures outlined in this manual.

Safety Message Conventions

Safety messages contained in this manual, DANGER, WARNING, and CAUTION are bold and highlighted in red for quick identification.

Danger

A Danger message indicates an imminently hazardous situation which, if not avoided, results in death or serious injury. Messages identified by the word **DANGER** are used sparingly and only for those situations presenting the most serious hazards.

Following is a typical example of a Danger message as it could appear in the manual:

DANGER
HIGH VOLTAGE - RISK OF SERIOUS INJURY OR DEATH
High voltages are present in the cabinets.
Before opening panels turn off all power.
Use the Lockout/Tagout procedure.

Warning

Following is a typical example of a Warning message as it could appear in the manual:

WARNING
RISK OF PERSONAL INJURY OR DAMAGE TO EQUIPMENT
Modification to the equipment may cause injury.

Caution

A Caution message indicates a potentially hazardous situation which, if not avoided, could result in minor or moderate injury. It may also be used to alert against unsafe practice.

Following is a typical example of a Caution message as it could appear in the manual:

RISK OF PERSONAL INJURY OR DAMAGE TO EQUIPMENT
Improper installation may result in the equipment malfunctioning and a safety hazard.
Read all of the installation instructions before installing the Wine Guardian unit.

Lockout/Tagout Procedure

1) Turn off the power switch (indicator light should be off)
2) Unplug the unit from the electrical outlet and cover the outlet to prevent accidently plugging in the unit.
3) Turn off circuit breaker or disconnect switch at condensing unit.

Safety Considerations

The equipment covered by this manual is designed for safe and reliable operation when installed and operated within its designed specifications. To avoid personal injury or damage to equipment or property when installing or operating this equipment, it is essential that qualified, experienced personnel perform these functions using good judgment and safe practices. See the following cautionary statements.

IMPORTANT
Installation and maintenance of this equipment is to be performed only by qualified personnel who are familiar with local codes and regulations and are experienced with this type of equipment.

Safety Hazards

Exposure to safety hazards is limited to maintenance personnel working in and around the unit. When performing maintenance, always use the Lockout/Tagout procedure, which is described in this chapter. Observe the maintenance safety guidelines in this manual.

Electrical Hazards

Working on the equipment may involve exposure to dangerously high voltage. Make sure you are aware of the level of electrical hazard when working on the system. Observe all electrical warning labels on the unit.

Electrical Shock Hazards

All power must be disconnected prior to installation and servicing this equipment. More than one source of power may be present. Disconnect all power sources to avoid electrocution or shock injuries.

Hot Parts Hazards

Electric resistance heating elements must be disconnected prior to servicing. Electric heaters may start automatically. Disconnect all power and control circuits prior to servicing the unit to avoid burns.

Moving Parts Hazards

The Motor and Blower must be disconnected prior to opening access panels. The motor can start automatically. Disconnect all power and control circuits prior to servicing to avoid serious injuries or possible dismemberment.

The fans are free-wheeling after the power is disconnected. Allow the fans to stop completely before servicing the unit to avoid cuts or dismemberment.

Rotating Fan Blades are present in the Wine Guardian unit. Sticking a hand into an exposed fan while under power could result in serious injury. Be sure to use the Lockout/Tagout procedure when working in this area or remove the power cord.

Equipment Safety Interlocks

There are no electrical safety lockouts installed within the unit. The power cord attached to the control box must be disconnected from the power sources prior to working on any part of the electrical system.

Main Power Switch

The main power switch is located on the side of the Wine Guardian unit. **(See Fig.1 on page 45)** It shuts off the power to the fan coil unit. A separate disconnect switch will be wired to the condensing unit. Both switches must be turned off prior to servicing equipment.

Energy Type	**Electrical**
Hazard	Electrocution, electrical burns and shock
Magnitude	120 volts and 230 volts / 1phase / 60Hz (DS models) 220-240 volts / 1 phase / 50Hz (WGS model)
Control Method	Disconnect power cord and On/Off switch

DANGER

- **Never** reach into a unit while the fan is running.
- **Never** open an access door to a fan while the fan is running.
- **Disconnect** the power cord switch before working on the unit. The unit may have more than one power source to disconnect.
- **Avoid** risk of fire or electric shock. **Do not** expose the unit to **rain** or **moisture**.

WARNING

- **Check** weights to be sure that the rigging equipment can support and move the Wine Guardian unit safely. Note any specific rigging and installation instructions located in the Installation section of this manual.
- All supports for the unit **must** be capable of safely supporting the equipment's weight and any additional live or dead loads encountered.
- All supports for the unit **must** be designed to meet applicable local codes and ordinances.
- **Do not** remove access panels until fan impellers have completely stopped. Pressure developed by moving impellers can cause excessive force against the access panels.
- Fan impellers continue to turn (free-wheel) after the power is shut off.

⚠ CAUTION ⚠

- **Clean** only with a dry cloth**.**
- **Never** pressurize equipment above specified test pressure. See Wine Guardian Specification sheet on pages 24 & 25.
- **Do not use the Wine Guardian near water.**
- **Do not** block any supply or return air register or duct. Install in accordance with the instructions in this manual. Do not defeat the safety purpose of the polarized or grounding type plug. A polarized plug has two blades with one wider than the other. A grounding type plug has two blades and a third grounding prong. The wide blade or the third prong is provided for your safety. If the provided plug does not fit into your outlet, consult an electrician for replacement of the obsolete outlet.
- **Protect** the power cord from being walked on or pinched, particularly at the outlet plugs, convenience receptacles, and the point where it exits the unit.
- **Only** use attachments/accessories specified by the manufacturer.
- **Always** operate this equipment from a 120/230 VAC, 1 phase, 60Hz power sources only (220/240 volts / 1 phase/ 50Hz models).
- **Always** ground the outlet to provide adequate protection against voltage surges and built-up static charges.
- **Refer all** servicing to qualified service personnel. Servicing is required when the unit has been damaged in any way.

Installation

CAUTION
SHARP EDGES
RISK OF SERIOUS INJURY
Sharp edges are present inside the Wine Guardian system.

Pre-installation Test

Test the system before installing it to check for non-visible shipping damage.

To test the Wine Guardian fan coil section:

- ✓ Set the system on the floor or a sturdy level surface.
- ✓ Ensure the control cable and remote interface controller are plugged into one of the com port.
- ✓ Plug in the system.
- ✓ Press the on/off switch to see if the control illuminates. This indicates the system has power.
- ✓ **A built-in timer within the controller prevents short cycling and keeps the system from turning on right away.** After a five-minute period, the fan should turn on and start to deliver air. Listen for any unusual noise or vibration.

Air Flow Diagram

Fig. 1

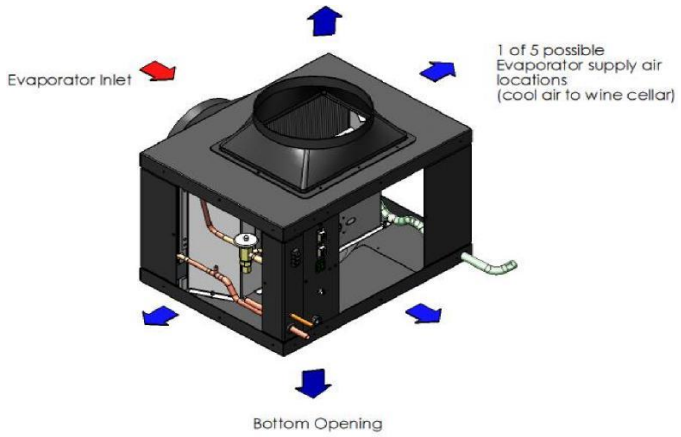

RISK OF PERSONAL INJURY OR DAMAGE TO EQUIPMENT
Modification to the equipment may cause injury or damage to the equipment.

DANGER

- ✓ This equipment is heavy. Place the unit on the floor or on a level and stable surface that can support the full weight of the unit.
- ✓ Do not modify the equipment. Modifications may cause damage to the equipment and will void the warranty.
- ✓ Never place anything on top of the unit.
- ✓ Never block or cover any of the openings or outlets to the unit.
- ✓ Never allow anything to rest on or roll over the power cord.
- ✓ Never place the unit where the power cord is subject to wear or abuse.
- ✓ Do not use extension cords.
- ✓ Never overload wall outlets.
- ✓ Do not remove or open any cover unless the unit is turned off and the power cord is plugged in.
- ✓ Use only dedicated power outlet boxes of the correct capacity and configuration for the unit model.

CAUTION

RISK OF PERSONAL INJURY OR DAMAGE TO EQUIPMENT
Improper installation may result in the equipment malfunctioning and a safety hazard.
Read all of the installation instructions before installing the Wine Guardian unit.

Planning the Installation

IMPORTANT
Installation of residential and commercial split systems must be performed by qualified service technicians with proper training in the installation, start up, service, and repair of these systems. Certification to handle refrigerants is also required.

Addressing Items in the Planning Process

- ✓ Where to locate the fan coil unit? Should it be built into the wine cellar or mounted remote and ducted into the cellar?
- ✓ How to mount the fan coil unit?
- ✓ Decide where to locate the supply and return grilles in the room to achieve the temperature gradient and circulation preferred.
- ✓ Locate the electrical power outlet close to the unit. **Do not use an extension cord!**
- ✓ Locate the condensing unit in a clean and well-ventilated area.
- ✓ Where to locate the remote interface controller and/or remote sensors?
- ✓ Where to run the drain line?
- ✓ Are all the parts available to complete the installation?

Performing a Pre-Installation Check

- ✓ Check for the proper installation of the electrical plug configuration.
- ✓ Check for the properly sized breakers for both the condensing unit and fan coil section.
- ✓ Is the cellar built with adequate insulation and vapor barriers?
- ✓ Are ducts installed above the ceiling or in accessible places properly sized before being covered?
- ✓ Is enough space available around the units for service and repair?

Installing the Fan Coil Unit

Wine Guardian fan coil units are typically installed indoors located near the cellar to minimize the duct runs. Each unit is provided with one entering or return air inlet and five possible supply air outlets. A maximum cumulative total length of flexible ductwork, for both supply and return ducts (including bends) of 25 feet (7.62 meters) is recommended. If longer runs are needed, use more than one supply opening to reduce the airflow in each duct by one-half, or install rigid ductwork that is typically less restrictive. Do not exceed 50 feet (15.2 meters) of total ductwork without using of booster fans. **See Recommended Flexible Ductwork Sizing Chart on page 37.**

Provide a three-foot clearance around the unit for removal of ductwork, or access for unit maintenance. If the humidifier is used, provide access space in front of it for service. (See separate humidifier manual.)

The fan coil unit can be located either above, or below the condensing unit in height. Wine Guardian strongly suggests that any height difference be kept as minimal as possible.

The fan coil unit is equipped with an On/Off switch, two communication ports, and an optional humidifier connection. One communication port is always used for the factory-supplied remote interface controller and is supplied with 50 feet (15.2) of communication cable (RJ-9). The second communication port can be used for other factory options, such as remote temperature/humidity sensors.

CAUTION

RISK OF PERSONAL INJURY OR DAMAGE TO EQUIPMENT

Check supporting structure for load bearing capacity to support the Wine Guardian. All supports must be designed to meet applicable local codes and ordinances. If in doubt, consult a qualified architect, engineer or contractor.

NOTE: Review Fig. 1 through Fig. 4 on the following pages before mounting the unit.

Floor Mounting

Mount the Wine Guardian fan coil on a plywood surface at least 12 inches (30.4cm) above the floor to keep it away from water. Allow adequate space for the external drain.

Wall Mounting

If the unit is mounted onto a wall, provide adequate support on both ends of the unit to accommodate the weight of the system. Use knee braces to transfer the load of the unit to the wall. A shelf can be constructed to support the unit or a wall mount kit can be purchased through a Wine Guardian distributor.

Ceiling Mounting

Construct a structurally sound, level platform to place the unit on when hanging it from the ceiling joists. The Wine Guardian is NOT designed to be suspended from the top of the unit; it must be supported from the bottom. Place the unit on a platform to ensure that the unit is supported on all four corners. Leave adequate space on the top of the unit to remove the access doors for service.

In all cases the unit must be level to within +/- 0.25 inches (+/- 6.35mm) end-to-end and +/- 1/8 inches (+/- 3.18mm) side-to-side for proper operation. Locate the unit as close to the wine cellar as possible to reduce the length of the duct runs. If possible, use short and straight ducting on all ductwork runs.

Typical Mounting Arrangements

The following illustrations are suggested mounting arrangements. These illustrations are not intended to be complete and detailed installation drawings. For questions or help regarding installation, contact a Wine Guardian distributor or email (info@wineguardian.com) a sketch of the proposed area where the unit is to be installed.

Handling and Installation

1) Mount unit on solid, level surface.
2) Allow sufficient space for access to unit and accessories.
3) Provide proper electrical service.
4) Provide water to humidifier.
5) Install drain line with proper pitch.

Floor Mount

Supply air at ceiling, low wall return

Fig. 1

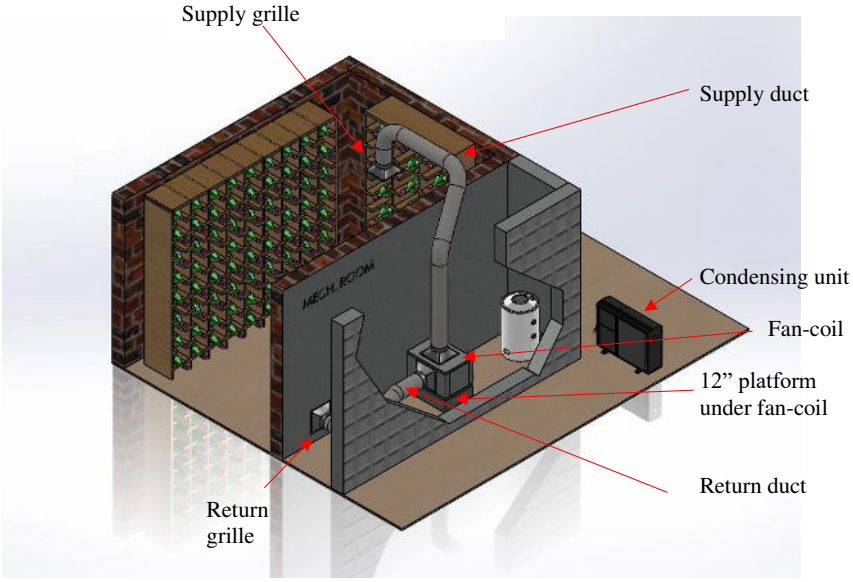

Ceiling Mount

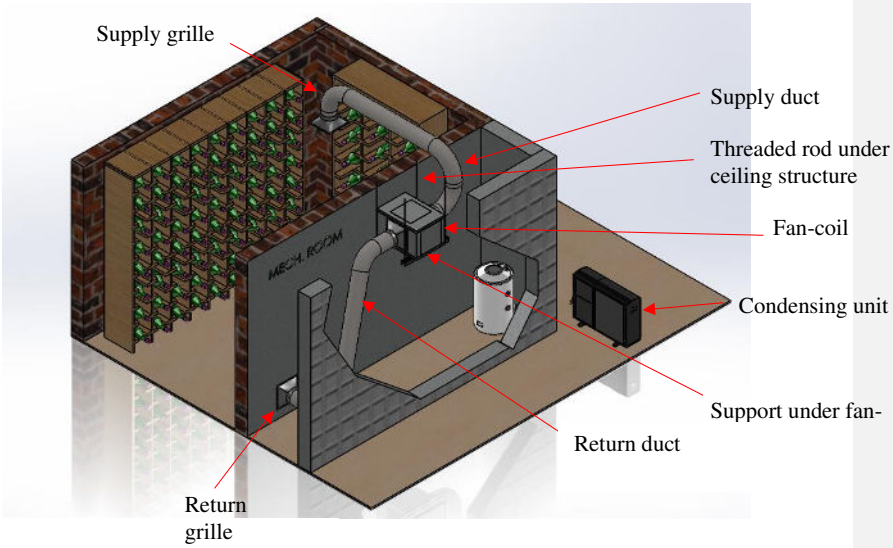

Wall Mount

Fig. 3

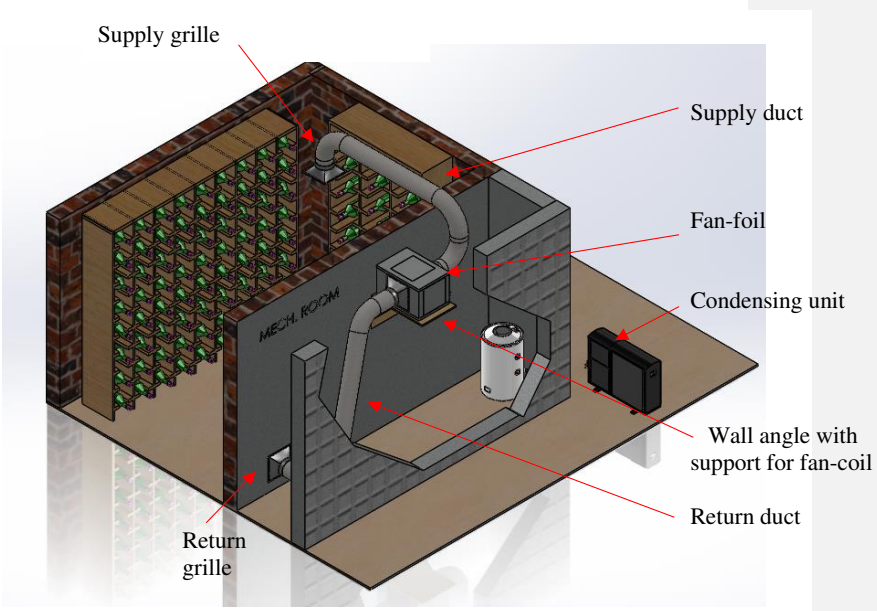

Optional ductwork connection on same wall

Fig. 4

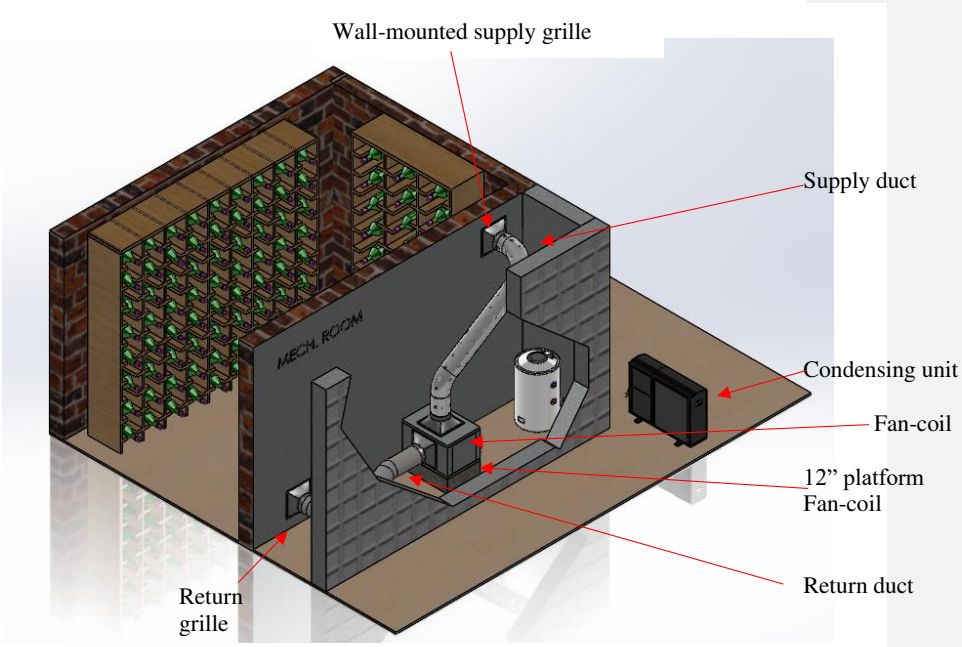

Installing the Ductwork and Grilles

Duct Collars

One inlet duct collar and one evaporator outlet are supplied with each fan coil unit as standard equipment from the factory. The duct collars are removable. The return air, or inlet duct collar must connect to the return air outlet from the wine cellar. Any of the five supply air outlets on the unit can be used for the ductwork to the supply grille(s) inside the wine cellar. The factory installed supply duct collar can be relocated to any of the five openings as needed.

Use ductwork to connect the unit to the supply and return outlets in the wine cellar. Use only insulated ductwork to minimize cooling loses, prevent sweating, and to reduce noise.

NOTE: Do not exceed a total of 25 feet (7.62 meters) of ductwork run (combined supply and return).

Table 2

Recommended Insulated Flexible Ductwork Sizing Chart for the Evaporator (cooling) Coil			
Model#	**Outlet (supply air) Single**	**Outlet (supply air) Double**	**Inlet (Return Air) Single**
DS025/WGS40	8 inches /20.3cm	6 inches /15.2cm	8 inches /20.3cm
DS050/WGS75	10 inches /25.4cm	8 inches / 20.3cm	10 inches / 25.4cm
DS088/WGS100	10 inches /25.4cm	8 inches / 20.3cm	10 inches / 25.4cm
DS200/WGS175	12 inches/30.48cm	10 inches/25.4cm	12 inches/30.48cm

CAUTION

RISK OF DAMAGE TO EQUIPMENT

Avoid crimping the flexible ducts. This chokes down the inside area and reduces the airflow, causing the unit to operate erratically.

Be sure all ducts and surface in contact with the airflow are insulated and have a vapor barrier on the outside surface.

NOTE: Uninsulated ducts and surfaces cause bare exposed metal surfaces to sweat, further degradation of the insulation and a loss of equipment cooling capacity.

Location of Supply and Return Grilles

Locate supply and return grilles inside the cellar to create an airflow pattern that maximizes air circulation in the room. Avoid short circulating of the air.

- ✓ Do not install the return air grilles directly on the floor as the grilles will collect dust from the floor.
- ✓ Do not locate the supply or return air grille where there are blocked by bottles, boxes or cases.
- ✓ Do not locate the supply air grille where it blows directly on the remote interface controller.

General Duct Recommendations

- ✓ Support the flexible duct often to prevent sags or bends.
- ✓ Stretch the duct to make for a smoother interior for less air resistance.
- ✓ For a 90-degree bend, insert a metal elbow inside the flexible duct to avoid crimping.
- ✓ Do not squeeze or reduce the inside diameter of the ducts. This restricts the airflow.
- ✓ Use short and straight ductwork.
- ✓ Review the configuration schematic on the Overview sketch on page 13 for information about which panels are available for duct connections and service.
- ✓ Remove the panels or grilles from the openings to connect the ductwork.
- ✓ Check that all the fan blades move freely.
- ✓ Check for loose foreign objects in any of the air paths.
- ✓ Connect the round flexible ducts to the Wine Guardian using the duct collars provided with the duct accessory kit.
- ✓ Pull the outer plastic wrapping and insulation away from the end of the duct to expose the reinforced inside duct liner.
- ✓ Use tie straps of clamp around the **inside liner** to fasten the duct collar.

NOTE: Do not clamp around the outside insulation. It compresses and loosens over time.

- ✓ Secure the duct collar to the unit using the screws provided. Be careful not to damage or bend the gasket.

Reducing Noise from the Unit

Consider noise when locating the unit close to the cellar or an adjacent occupied space. A piece of one – or two-inch dense rubber or Styrofoam with foil face in between the unit and the wall absorbs and reduces the noise from the unit. In case of air noise use larger grilles or block the noise with a solid piece of wood or Styrofoam. Sound usually travels as a line of sight. Sound is reduced when it turns a corner, such as passing through a bend in ductwork. If the unit is supported from a wall or joist, place a rubber pad under the unit to reduce vibration transmission.

Installing the Condensate Drain Connection

The Wine Guardian unit provides dehumidification for the inside of the wine cellar. It cools the air down to the dew point corresponding to the temperature setpoint of the remote interface controller. If the vapor barrier of the wine cellar is poorly constructed or excess moisture is in the basement, the unit may remove excessive amounts of moisture from the wine cellar. The moisture appears in the condensate drain of the unit.

NOTE: If moisture becomes excessive, install a room type dehumidifier to dehumidify the basement to not overload your Wine Guardian.

Installing the Drain Line

- ✓ The drain line must extend from the unit to an external drain or disposal site. Do not use drain tubing any smaller than one-half inch inside dimension on the unit.
- ✓ If no drain is available, use a bucket. Do not extend the drain below the rim of the bucket. Empty the bucket periodically.

The Wine Guardian unit is provided with a built-in drain trap. The drain trap creates a water seal to prevent air from backing up into the drain pan and causing the drain pan to overflow. Do not create secondary traps in the external drain line.

Allow enough height for the drain line to function properly. If draining into a nearby sink, the unit must be elevated higher than the rim of the sink for the water to drain by gravity. Install with a one-quarter inch per linear foot of pitch. **Do not** tie the condensate drain line directly into the sanitary sewer system. See Accessories and Optional Equipment on page 11 for information about the condensate pump.

Priming the Drain Trap

The internal drain trap primes itself automatically once the unit has run for a period of time and after the unit cycles off. This can be confirmed by water dripping from the drain.

Wiring the Fan Coil Unit for Power

DANGER
ELECTRICAL SHOCK HAZARD
RISK OF SERIOUS INJURY OR DEATH
The electrical outlet and wiring installation must meet the national and local building codes.

DO:

Match the electrical wiring to the cord provided on the Wine Guardian.
Provide dedicated circuit and wiring for the system.
Match the wiring and breaker size to the rated load as shown on the serial plate and in this guide. See sample serial plate illustration below.

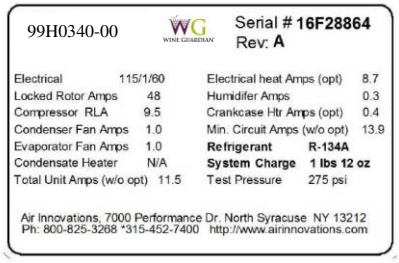

99H0340-00 WG WINE GUARDIAN Serial # **16F28864** Rev: **A**

Electrical	115/1/60	Electrical heat Amps (opt)	8.7
Locked Rotor Amps	48	Humidifer Amps	0.3
Compressor RLA	9.5	Crankcase Htr Amps (opt)	0.4
Condenser Fan Amps	1.0	Min. Circuit Amps (w/o opt)	13.9
Evaporator Fan Amps	1.0	**Refrigerant**	**R-134A**
Condensate Heater	N/A	**System Charge**	**1 lbs 12 oz**
Total Unit Amps (w/o opt)	11.5	Test Pressure	275 psi

Air Innovations, 7000 Performance Dr. North Syracuse NY 13212
Ph: 800-825-3268 *315-452-7400 http://www.airinnovations.com

.DO NOT:

- ✓ DO NOT MODIFY THE PLUGS IN ANY WAY!
- ✓ Do not use extension cords.

IMPORTANT
The electrical power supply must be either 115 volt or 230-volt AC 1 phase, 60 cycle, for models DS and 220/240 volt, 1 phase, 50 cycle for models WGS.
This cannot vary more than plus or minus 4% or damage may occur to the unit.

Plug the unit into the wall outlet. Gently pull on the plug to make sure it is tight.

Required for Models
DS025, DS050, WGS40, WGS75
-115VAC, 60Hz

-NEMA 5-15R

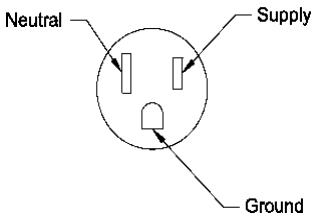

Required for Models
DS088, WGS100
-230VAC, 60Hz

-NEMA 6-15R

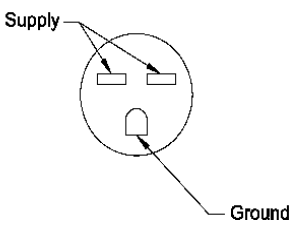

Required for Models
DS200, WGS175
-230VAC, 60Hz

-NEMA 6-20R

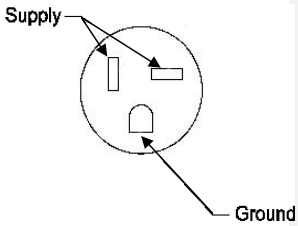

Installing the Condensing Unit

- Condensing units are factory assembled with an aluminum outdoor enclosure for protection from the elements.
- A minimum of 12 inches (30cm) is required around the perimeter of the condensing unit for proper airflow across the coil, and to provide an adequate discharge airflow path. Any obstructions to this airflow will result in a decrease in performance, and possibly premature failure due to a buildup of high pressure within the system.
- The condensing unit is designed to operate in ambient temperatures ranging from 0°F-115°F (minus -18°C - 46°C), as it is supplied with many standard features to assist full operation in this wide range.
- Mount the condensing unit above normal snowfall levels, so as to allow uninhibited winter operation. A buildup of snow or any obstruction to airflow will result in a decrease in performance and possible premature failure due to an increasingly high pressure within the system.

Installation of Interconnecting Refrigerant Lines (Suction and Liquid)

NOTE: The interconnecting copper refrigerant lines shall be supplied by the installer. The larger suction line must be fully insulated along its complete length from condensing unit to fan coil unit. There is a factory-installed liquid line filter-drier inside the condensing unit; therefore, no additional drier is needed for proper operation. A liquid line moisture/sight glass is factory installed in the condensing unit to assist in monitoring the refrigerant charge, and the state of the refrigerant in the system.

- Keep horizontal and vertical distances between the indoor and outdoor section as close as possible to minimize refrigerant charge required. This will reduce system issues related to oil management that can impair performance and jeopardize the compressor's lubrication.
- Provide a one-inch pitch in suction and liquid line toward the evaporator for every 10 feet (3 meters) of run to prevent any refrigerant that condenses in the suction line from flowing to the compressor when the unit is off. These two lines can be routed together and wrapped together, as long as the suction line is fully insulated as previously directed.
- Suction line riser traps are not required if the riser is properly sized to maintain refrigerant velocity. Adding a trap will only increase pressure drop.
- Prevent dips, sags, or other low spots that will trap refrigerant oil, which is an issue especially with long horizontal runs. Use hard refrigerant copper for longer horizontal runs to prevent potential oil return problems. (see sample piping chart on page 40)
- When sweat connections are made in the connecting lines, be sure that the inside of the tubing is clean before installing the unit. Use a dry nitrogen bleed during brazing. Note that compressor suction and discharge valves should be open to atmosphere no longer than 15 minutes. Compressors with POE (polyolester) oil will quickly become contaminated when opened to atmosphere. On any installation, the use of a suction line filter, liquid line filter drier and moisture indicator is recommended. If the suction line is larger than one-

quarter inch, a vibration eliminator should be installed close to the motor compressor in a horizontal parallel to the compressor, crankshaft or in a vertical position 90 degrees to compressor crankshaft.

NOTE: The suction line should be clamped near the inlet end of the vibration eliminator. The vibration eliminator is located between the clamp and the compressor.

Split System Interconnecting Line Sizing Chart

Table 3

60Hz Models

Model	Liquid Line(OD)	Liquid connection at evaporator (OD)	Suction line (OD)	Min. Suction line insulation thickness (in)	Suction connection at evaporator (OD)	Maximum "total" line length	Maximum lift (height)
D025	1/4"	1/4"	3/8"	3/8"	3/8"	50'	15'
D050	1/4"	1/4"	1/2"	3/8"	***3/8"**	50'	15'
D088	3/8"	***1/4"**	5/8"	5/8"	***1/2"**	**50'**	**15'**
D200	3/8"	3/8"	¾"	5/8"	***1/2"**	**50'**	**15'**

***Interconnecting tube must be reduced down at evaporator connection**

50Hz Models

Model	Liquid Line(OD)	Liquid connection at evaporator (OD)	Suction line (OD)	Min. Suction line insulation thickness (in)	Suction connection at evaporator (OD)	Maximum "total" line length	Maximum lift (height)
WGS40	0.635cm	0.635cm	0.952cm	0.952cm	0.952cm	15.24 meters	4.57 meters
WGS75	0.635cm	0.635cm	1.27cm	0.952cm	0.952cm [1]	15.24 meters	4.57 meters
WGS100	0.952cm	0.635cm	1.59cm	1.59cm	1.27cm [2]	15.24 meters	4.57 meters
WGS175	0.952cm	0.952cm	1.905cm	1.59cm	1.27cm [3]	15.24 meters	4.57 meters

[1] Use ½" (1.27cm) to 3/8" (0.952cm) reducer at evaporator
[2] Use 5/8" (1.59cm) to ½" (1.27cm) reducer at evaporator
[3] Use ¾" (1.91cm) to 1/2" (1.27cm) reducer at evaporator

Notes:

- ***Line lengths are expressed in equivalent feet = actual run length + fitting allowances (i.e. ~5' for each bend/elbow allowance).***
- ***Use only refrigeration grade dehydrated tubing.***

- ***Install refrigeration piping per local codes and ASHRAE guidelines.***

Sample Piping Configurations

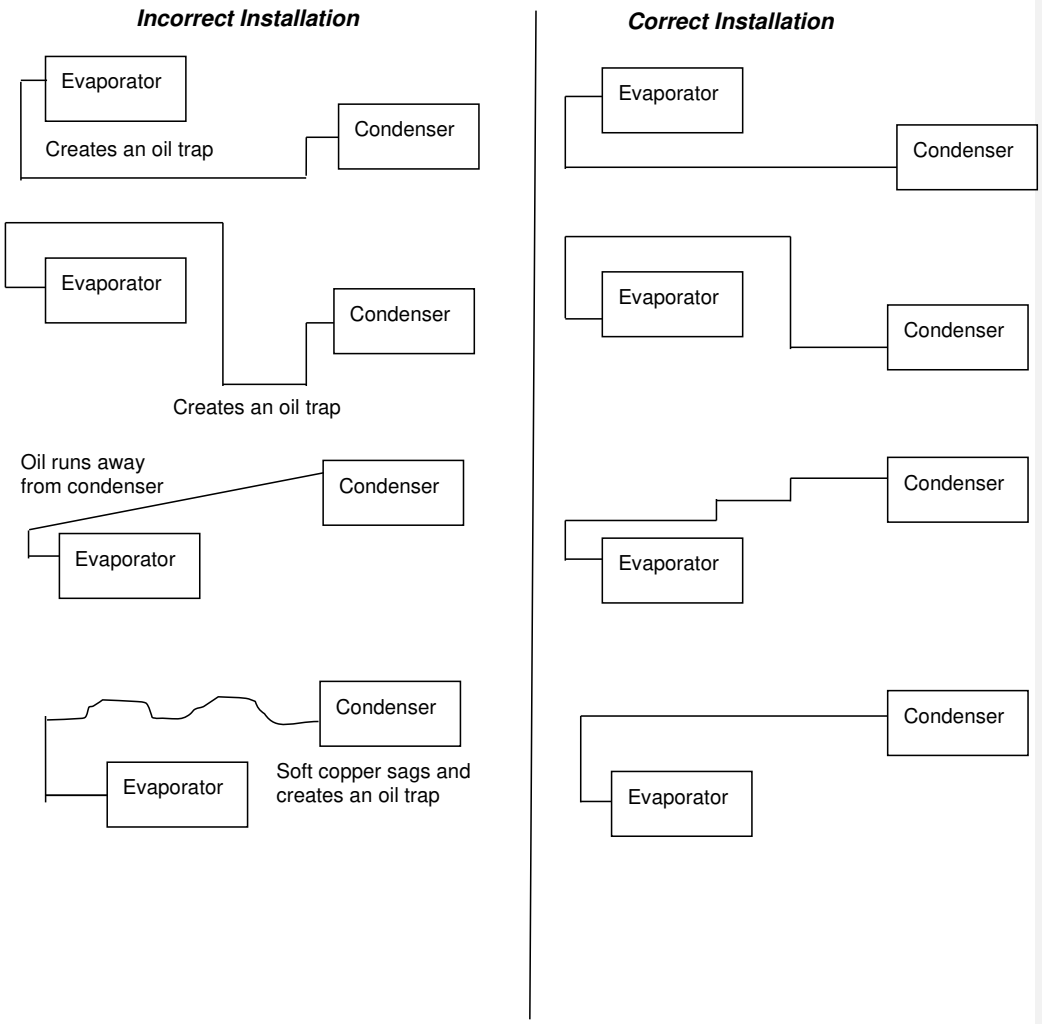

Leak Checking and Evacuation Process

- Pressurize and leak test the interconnecting lines, including the fan coil unit, fittings, and brazed joints using the intended operating refrigerant, nitrogen, or dry air for leak testing. A pressure equal to the low side test pressure marked on the unit nameplate is recommended for leak testing. Repair any leaks found. Connect a good vacuum pump to both the low and high side service valves while still in their factory supplied position, isolating the refrigerant charge in the condensing unit. Draw a deep vacuum of at least 15pp microns. Do not use the motor compressor to pull a vacuum and do not operate the motor compressor in a vacuum.
- Evacuate the system to hold at 500 microns and break the vacuum by releasing the factory refrigerant charge in the condensing unit to interconnect lines and fan coil unit by opening service valves. Remove the vacuum pump. The system is now ready for optimal charging. The condensing unit comes pre-refrigerant charged for 10 feet (3 meters) of interconnecting tube. Charge the system with the correct amount of refrigerant and mark the amount, with a ballpoint pen, in the space provided on the unit nameplate.

NOTE: When charging through the suction service valve the refrigerant should be charged in vapor form. NEVER CHARGE IN LIQUID FORM. Refrigerant should always be charged through a dryer. Charging in liquid form may damage the valve plate assembly as well as scrub the oil out of the compressor bearings.

WARNING

NON-AZEOTROPES MUST BE CHARGED IN THE LIQUID PHASE ONLY. TO AVOID COMPRESSOR DAMAGE, LIQUID MUST ALWAYS BE CHARGED INTO THE HIGH SIDE OR INTO AN ACCUMULATOR.

NOTE: Be sure there is not an overcharge of refrigerant. An overcharge might permit liquid refrigerant to enter the motor compressor and damage the valves, rods, pistons, etc.

Wiring

- Wire the system as per the supplied wiring schematics starting on page 19 of this manual.
- The DS fan coil unit is powered through a factory-supplied power cord (for DS models, WGS is hard connected) but you will need to run 24-volt power wires from the low voltage terminal block on the fan coil to the terminal block in the junction box in the condensing unit labeled Y & C. This can be typical controller wire or 18-gauge insulated wire. (see Fig.2 & 3 on the following page)

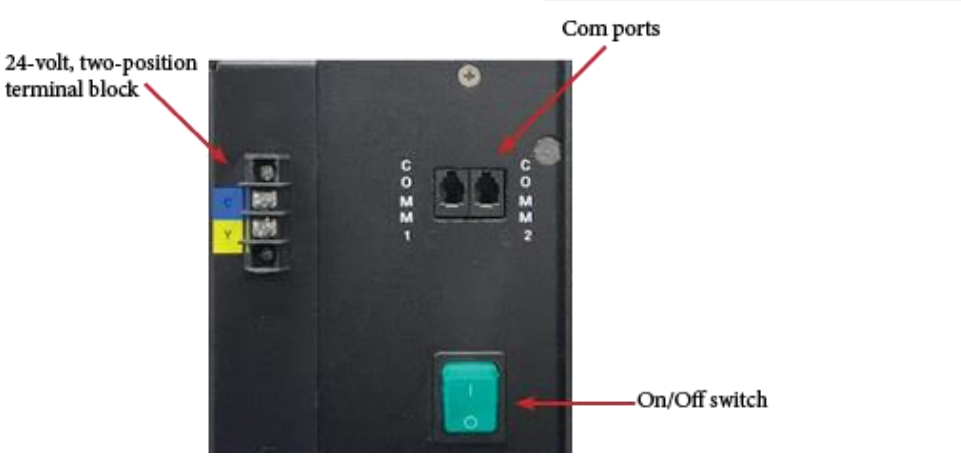

Fig 1

Fig 2

Fig. 3

- The condensing unit needs to be hard-wired for the rated high voltage to be brought to the factory-installed contactor in chassis cabinet to the line side (L1 & L3) of the contactor. Use table 1 to identify the minimum recommended AWG, **USE COPPER WIRE ONLY**. Run a ground lead to be connected to the condensing unit Ground lead/LUG. There is a separate ground lug for the condensing unit internal components (See Fig 3). The load side of the factory-installed contactor will be factory-wired.
- Turn on power to the condensing unit 24 hours prior to system start-up to allow crankcase heater to warm up compressor crankcase.

Unit	Recommended Minimum AWG
DS200; WGS175	12
DS088; WGS100	16
DS050; WGS75	16
DS025; WGS40	16
SS018; WGS25	16

Refrigerant Charging

NOTE: Models DS, and WGS utilize a Headmaster control valve to control head pressure at low ambient applications, therefore require a specific initial charging procedure as outlined below.

***Determining the amount of charge* – Low ambient and extreme low ambient (XLA) systems** - When "refrigerant side" head pressure control is utilized on a system, one of the most important factors is determining the total system refrigerant charge. While on most packaged units the amount of charge is listed on the unit, the required charge for a field built-up system cannot be listed by the manufacturer. Charge is usually added when the system is started up until "proper" system performance is reached. However, this is not satisfactory and if the system is to function properly year-round, the correct amount of extra charge must be calculated ahead of time.

*****SEE PAGE 50 FOR DESIGNED AMOUNTS OF REFRIGERANT CHARGE FOR YOUR SPECIFIC MODEL SYSTEM*****

Procedures for Charging System with Head Pressure Control

NOTE: When charging any system with head pressure control the outdoor ambient temperature must be known.

Charging of Systems with Head Pressure Control in temperatures above 70° F (21°C) --After normal evacuation procedures:

1. Connect refrigerant cylinder to liquid line service valve port.
2. Charge liquid refrigerant into the high side of the system. Weighing the charge is recommended.
3. Remove the refrigerant drum and connect it to the suction service valve.
4. Charge refrigerant vapor into the low side. Do not allow **liquid** refrigerant into the low side.
5. Start the system.
6. Observe sight glass (factory-installed) to see if system is filling with refrigerant for normal refrigeration cycle.

CAUTION

BUBBLES IN THE *SIGHT GLASS* CAN BE CAUSED BY FLASHING DUE TO PRESSURE DROP FROM PIPE OR ACCESSORY LOSSES, ETC.

7. If the **Sight glass** shows bubbles, more refrigerant may be required, while allowing sufficient time for the refrigerant to stabilize and clear the **Sight glass.** Use supplied information on the following pages for proper final charge.

Charging of Systems with Sporlan Head Pressure Control in temperatures below 70° F (21°C) (After normal evacuation procedures):

NOTE: When charging in ambient below 70°F (21°C) the procedure is very critical. Be sure to adhere to the following steps. Failure to do so will result in overcharging the system.

1. Follow instructions 1 through 7 above.
2. If the valve setting is correct for the system being charged, it is quite likely that some refrigerant will be backed up into the condenser and the **Sight glass** will indicate bubbles in the liquid line.
3. Add more refrigerant, while allowing sufficient time for the refrigerant to stabilize and clear the **Sight glass.** Use supplied information on the following pages for proper final charge.
4. At this point the system is correctly charged for this type of head pressure control at the ambient temperature that exists while the charging procedure is taking place.
5. If the system is designed to operate at ambient below the ambient that exits during charging, additional charge may have to be added now.

Good system performance during low ambient operation depends on proper refrigerant charge, therefore, it is very important that this phase of the installation procedure be done carefully. Poor system performance is often caused by over or under charging of refrigerant and may be the most overlooked.

With the system started

- After following instructions on the previous page Charging for Systems with Head Pressure Control, with refrigerant tank now connected to suction line (low side) port to add remaining charge in a gas state, refer to the provided charts for proper system operating points as equated to ambient temperature with wine cellar at normal conditions of 57° F (13°C) / 55%RH. Refer to Split Systems Operations chart on page 40 for system pressures, sub-cooling, and superheat values to allow you to charge your system correctly.

- In addition to using the Systems Operations Chart, there is a liquid line moisture/sight glass located in the condensing (outdoor) unit as a useful guide to help determine if the system has been sufficiently charged. HOWEVER, a full sight glass or a glass with bubbles does not necessarily indicate the system is properly charged or undercharged. There may be other factors affecting sight glass, so do not charge by sight glass method only. A full sight glass- matched with proper system pressures, sub-cooling, and superheat values is the proper method for confirming that the system charge is correct for your application.

If you are not sure how to measure superheat or sub-cooling:

Superheat

- Get an accurate suction line temperature on the suction line as close to the compressor inlet as possible. At same time, attach a compound pressure gauge set to the system so as to read the low side suction pressure at the suction service valve port (back seated valve stem to allow un-restricted refrigerant flow from evaporator back to the compressor). Convert suction pressure to a saturated temperature as derived from a pressure/temperature chart. Since the suction line temperature is the higher value, subtract the saturated temperature from it to derive your superheat. If your wine cellar is already at specified conditions e.g., 57° F (13°C), 55% RH), and if your superheat is very low, or zero, you may have overcharged your system.

Sub-Cooling

- With your compound pressure gauge set still installed with the high side connect to the valve port on the liquid receiver (back seated valve stem to allow un-restricted refrigerant flow from condenser to evaporator). Convert this liquid pressure to a saturated temperature from pressure/temperature chart. Next, obtain your liquid line temperature by getting an accurate reading on the liquid line BEFORE the TXV expansion on the indoor side. Obtain this temperature entering the evaporator unit. Subtract the liquid line temperature from the saturated liquid temperature to derive the system sub-cooling.

System Charging Amount:

Note: Each DS & WGS Model condensing unit is shipped with 16oz/.453kg of refrigerant charge already, to be taken into account for below total amounts based on 25'/7.62 meters interconnect length.

For system charge adjustments compared to 25'/7.62 meters factory baseline:

DS025, DS050, WGS40, WGS75 if 1/4"/.635cm OD (outside diameter) liquid line, adjustments will be ~ .50oz/foot & .0465kg/meter
DS088, WGS100, DS200, WGS175 if 3/8"/.952cm OD (outside diameter) liquid line, adjustments will be ~ 1.0oz/foot & .093kg/meter

For reference: Suggested total system charge based on factory testing using 25 feet (7.62 meters) of interconnected piping in table below.

DS025	59-ounce total charge
WGS40	58-ounce total charge (1.64 kg)
DS050	55-ounce total charge
WGS75	64-ounce total charge (1.81 kg)
DS088	105-ounce total charge
WGS100	106-ounce total charge (3.01 kg)
DS200	108-ounce total charge
WGS175	110-ounce total charge (3.12 kg)

Examples of adjustments:

(Less than 25'/7.62 meters): If a WGS40 system that is only 15'/4.57 meters (10'/3.05 meters less than factory charge baseline from table above) in total length. At .50oz/foot & .0465kg/meter adjustment, that equals a decrease in total system charge from factory baseline of 5oz /.142kg. Now a total system charge of 53oz/1.498kg. You then can subtract the initial factory charge of 16oz/.453kg from this new total, and that is the amount you ADD to the system upon start-up.

In this example = 37oz/1.045kg ADDED

(Greater than 25'/7.62 meters): If a WGS40 system that is 35'/10.67 meters (10'/3.05 meters greater than factory charge baseline from table above) in total length. At .50oz/foot & .0465kg/meter adjustment, that equals an increase in total system charge from factory baseline of 5oz /.142kg. Now a total system charge of 63oz/1.78kg. You then can subtract the initial factory charge of 16oz/.453kg from this new total, and that is the amount you ADD to the system upon start-up.

In this example = 47oz/1.327kg ADDED

Additional Charge for Xtreme Low Ambient Systems (XLA Option)

For systems that have Wine Guardian's XLA option installed. Add the following additional charge to the system.

SS018, DS025, DS050	4.0 oz
WGS25, WGS40, WGS75	4.0 oz
DS088, DS200	6.0 oz
WGS100, WGS175	6.0 oz

Once the system has been charged compare the high side system pressure to the "discharge line pressure" found on the "Split System Operations Chart" on page 50 for proper operation. If actual discharge pressures do not match the chart then compare subcooling values as additional charge may be needed.

Split System Operations Chart

*** Operation data is based on typical wine cellar conditions of 57°F (14 Deg C)DB/49°FWB (55%RH)

DS025				
OD Ambient (F)	**Suction (psig)**	**Discharge (psig)**	**Suction Superheat (F)**	**Sub-cooling (F)**
10 ºF / -12 ºC	21	100	7 ºF / -14 ºC	23 ºF / -5 ºC
40 ºF / 4 ºC	24	104	13 ºF / -10 ºC	24 ºF / -4 ºC
60 ºF / 15 ºC	24	107	22 ºF / -5 ºC	20 ºF / -6 ºC
70 ºF / 21 ºC	24	108	25 ºF / -4 ºC	18 ºF / -7 ºC
80 ºF / 26 ºC	24	108	31 ºF / -1 ºC	16 ºF / -8 ºC
100 ºF / 37 ºC	27	150	38 ºF / 3 ºC	19 ºF / -7 ºC
115 ºF / 46 ºC	30	190	40 ºF / 4 ºC	21 ºF / -6 ºC
DS050				
OD Ambient (F)	**Suction (psig)**	**Discharge (psig)**	**Suction Superheat (F)**	**Sub-cooling (F)**
20 ºF / -6 ºC	22	96	15 ºF / -9 ºC	9 ºF / -12 ºC
30 ºF / -1 ºC	24	100	13 ºF / -10 ºC	10 ºF / -12 ºC

50 ºF / 10 ºC	26	102	16 ºF / -8 ºC	19 ºF / -7 ºC
60 ºF / 15 ºC	24	100	21 ºF / -6 ºC	16 ºF / -8 ºC
70 ºF / 21 ºC	26	98	23 ºF / -5 ºC	13 ºF / -10 ºC
80 ºF / 26 ºC	27	114	26 ºF / -3 ºC	15 ºF / -9 ºC
100 ºF / 37 ºC	28	160	32 ºF / 0 ºC	16 ºF / -8 ºC
115 ºF / 46 ºC	32	208	34 ºF / 1 ºC	18 ºF / -7 ºC
DS088				
OD Ambient (F)	**Suction (psig)**	**Discharge (psig)**	**Suction Superheat (F)**	**Sub-cooling (F)**
25 ºF / -4 ºC	23	98	8 ºF / -13 ºC	17 ºF / -8 ºC
40 ºF / 4 ºC	24	98	13 ºF / -10ºC	18 ºF / -7 ºC
60 ºF / 15 ºC	24	98	22 ºF / -5 ºC	16 ºF / -9 ºC
70 ºF / 21 ºC	24	104	24 ºF / -4ºC	10 ºF / -12 ºC
80 ºF / 26 ºC	24	130	30 ºF / -1 ºC	15 ºF / -9 ºC
100 ºF / 37 ºC	26	185	38 ºF / 3 ºC	19 ºF / -7 ºC
115 ºF / 46 ºC	28	235	31 ºF / -.5 ºC	21 ºF / -6 ºC
DS200				
OD Ambient (F)	**Suction (psig)**	**Discharge (psig)**	**Suction Superheat (F)**	**Sub-cooling (F)**
30 ºF / -1 ºC	21	100	13 ºF / -10 ºC	3 ºF / -16 ºC
40 ºF / 4 ºC	21	100	12 ºF / -11 ºC	3 ºF / -16 ºC
60 ºF / 15 ºC	22	110	14 ºF / -10 ºC	4 ºF / -15.5 ºC
70 ºF / 21 ºC	22	132	16 ºF / -9 ºC	5 ºF / -15 ºC
80 ºF / 26 ºC	23	160	18 ºF / -7 ºC	6 ºF / -14 ºC
100 ºF / 37 ºC	23	213	20 ºF / -6ºC	7 ºF / -13 ºC
115 ºF / 46 ºC	25	240	24 ºF / -4ºC	3 ºF / -16 ºC

WGS40				
OD Ambient (F)	**Suction (psig)**	**Discharge (psig)**	**Suction Superheat (F)**	**Sub-cooling (F)**
10 ºF / -12 ºC	23	95	6 ºF / -14 ºC	17 ºF / -8 ºC
40 ºF / 4 ºC	26	102	12 ºF / 11ºC	26 ºF / -3 ºC
60 ºF / 15 ºC	28	105	19 º F / -7 ºC	20 ºF / -6 ºC
70 ºF / 21 ºC	28	107	22 ºF / -5 ºC	18 ºF / -7 ºC
80 ºF / 26 ºC	28	106	27 ºF / -3 ºC	15 ºF / -9 ºC
100 ºF / 37 ºC	30	144	36 ºF / 2 ºC	16 ºF / -8 ºC
115 ºF / 46 ºC	32	180	37 ºF / 3 ºC	20 ºF / -7 ºC
WGS75				
OD Ambient (F)	**Suction (psig)**	**Discharge (psig)**	**Suction Superheat (F)**	**Sub-cooling (F)**
20 ºF / -6 ºC	26	96	6 ºF / -14 ºC	23 ºF / -5 ºC
30 ºF / -1 ºC	26	97	10 ºF / -12 ºC	23 ºF / -5 ºC
40 ºF / 4 ºC	26	97	13 ºF / -10 ºC	21 ºF / -6 ºC
60 ºF / 15 ºC	26	96	20 ºF / -6 ºC	15 ºF / -6 ºC
70 ºF / 21 ºC	26	98	27 ºF / -3 ºC	11 ºF / -12 ºC
80 ºF / 26 ºC	28	116	28 ºF / -2 ºC	12 ºF / -11 ºC
100 ºF / 37 ºC	30	167	35 ºF / 2 ºC	14 ºF / -10 ºC
WGS100				
OD Ambient (F)	**Suction (psig)**	**Discharge (psig)**	**Suction Superheat (F)**	**Sub-cooling (F)**
20 ºF / -6 ºC	25	100	11 ºF / -12 ºC	11 ºF / -12 ºC
40 ºF / 4 ºC	26	101	14 ºF / -10 ºC	17 ºF / -8 ºC
60 ºF / 15 ºC	26	98	18 ºF / -8 ºC	14 ºF / -10 ºC
70 ºF / 21 ºC	26	100	20 ºF / -7 ºC	10 ºF / -12 ºC
80 ºF / 26 ºC	28	125	22 ºF / -6 ºC	9 ºF / -13 ºC
100 ºF / 37 ºC	30	175	25 ºF / -4 ºC	8 ºF / -13 ºC
115 ºF / 46 ºC	29	217	32 ºF / 0 ºC	17 ºF / -8 ºC
WGS175				
20 ºF / -6 ºC	22	96	15 ºF / -9 ºC	42 ºF / 6 ºC
40 ºF / 4 ºC	22	96	15 ºF / -9 ºC	39 ºF / 4 ºC
60 ºF / 15 ºC	22	107	21 ºF / -6 ºC	24 ºF / -4 ºC
70 ºF / 21 ºC	23	125	19 ºF / -7 ºC	24 ºF / -4 ºC
80 ºF / 26 ºC	23	146	22 ºF / -6 ºC	26 ºF / -3 ºC
100 ºF / 37 ºC	24	188	22 ºF / -6 ºC	27 ºF / -3 ºC
115 ºF / 46 ºC	27	233	22 ºF / -6 ºC	28 ºF / -2 ºC

Installing the Thermostat and Communication Cable

The Wine Guardian Wireless-to-base Remote Interface Controller is a combination temperature and humidity controller with single stage cooling, heating and humidity control. Its capacitive touch screen incorporates an on/off switch, adjustment arrows and settings buttons for ease of use and programming. The controller can be installed one of two ways:

Wired (recommended) – wired directly to the Wine Guardian unit through an RJ-9 communication cable. 50' (15.25 meters) of control cable is included with each controller with longer lengths available as an option.

> ***IMPORTANT***
>
> ***Whenever possible we strongly suggest wiring the Remote Interface Controller directly to the Wine Guardian unit to avoid periodic battery changes and uninterrupted service.***

Wirelessly - connects wirelessly to the Wine Guardian unit by Radio Frequency connectivity through one of twelve selectable channels.

> ***IMPORTANT***
>
> ***Wireless installation may result in limited communication range and connectivity issues depending upon building construction and distance between Wine Guardian unit and Remote Interface Controller and/or Remote Sensors.***

The Wine Guardian Wireless-to-base Remote Interface Controller is a configurable device that can be fine-tuned through a series of individual settings. The controller incorporates eight (8) key temperature, humidity and system alarm points. Remote alarm indication is possible through terminal point connections at our main control board.

In most applications, the remote interface controller will be mounted within the wine cellar. The remote interface controller can also be mounted directly outside of the wine cellar or in any other room of the home or building. When mounted outside of the wine cellar, a remote sensor kit or a second wireless remote interface must be purchased and installed within the wine cellar.

> ***IMPORTANT***
>
> ***Regardless of wired or wireless each, Wine guardian System can have a maximum of two (2) Remote Interface Controllers and three (3) Remote Sensors.***

Additional Remote Interface:

Prior to adding an additional remote interface to the system, you will have to change setting 30 on the first control to give it a different address. Refer back to page **60** for instructions on how to access the interface Settings, and get to Setting 30 (shown on page 65).

Commented [CD1]: I added this to the Chinese Manual

Controller Specification

Application	**WG only, single stage cooling or heating Humidification**
Programmable	**No**
Change over	**Auto or manual, Fan ON or AUTO**
Color	**Black (only)**
User interface	**Touch screen**
Auto defrost control	**Yes, with Serving temp option**
Connection	**Communicating – RJ-9 cable**
Wireless-to-base communication range	**40' line of site**
Wireless-to-base channels	**12**
Remote sensors	**Yes, wired or wireless**
Temperature adjustment	**34 to 97 Deg F (1 to 36 Deg C)**
Temperature tolerance	**+/- 2 Deg F (+/- 1.1 Deg C)**
Humidity adjustment	**2% to 93% RH**
Humidity tolerance	**+/- 10% RH**
System temperature diagnostics	**Not Available**
Alarms	**High temp, low temp. High humidity, low humidity. High pressure fault. Condensate, Defrost and Communication error**

Mounting the Remote Interface Controller (Wired)

Fig. 4

1. Disconnect the communication cable from the side of the Wine Guardian unit and the remote interface controller. (Fig. 1)
    a. Route the communication cable within the wall and/or ceiling structure of the wine cellar to the desired controller mounting location.
    b. Plan on mounting the remote interface controller on a solid surface away from doors, corners, air outlets, drafts or heat generating equipment. Do not mount the remote interface controller directly on an outside wall, a wall adjacent to a boiler room, or other hot area. Use a piece of foam insulation behind the sensor to insulate it from a hot or cold surface. The recommended height is four to five feet above the finished floor.

2. Remove the back plate of the controller (Fig. 2) by removing two (2) screws that hold it in place on the remote interface. Place the back plate against the wall and mark the location of the two mounting points (Fig. 3). Also mark the location of the penetration for the communication cable as this area will require sufficient clearance for the cable to exit the wall and attach to the back of the controller.

3. Drill two one-eighth inch holes and insert anchors at the marked locations. Anchors may not be required if securing to a wall stud or racking system. Insert the screws into the holes and test fit the backing plate to ensure it mounts easily onto the two screws and slides down onto the slotted opening freely (Fig. 4).

4. Re-install plastic face plate on to backing plate.

5. Plug in the communication cable to the back of the remote interface controller backing plate. (Fig. 5)

    a. If using multiple Remote Interfaces either connect each Sensor to each other in series using RJ-9 cable or purchase a RJ-9 Splitter to be used on the unit.

6. Attach the Controller to the wall

7. Re-attach the communication cable to the side of the Wine Guardian cooling unit.

Fig. 5

Mounting the Remote Interface Controller (Wireless)

Fig. 4

1. Disconnect the controller wire from the side of the Wine Guardian unit and save for future use.

2. Plan on mounting the remote interface controller on a solid surface away from doors, corners, air outlets, drafts or heat generating equipment. Do not mount the remote interface controller directly on an outside wall, a wall adjacent to a boiler room, or other hot area. Use a piece of foam insulation behind the sensor to insulate it from a hot or cold surface. The recommended height is four to five feet above the finished floor.

3. Unscrew and remove the back plate from the Remote Interface Controller (Fig. 1)

4. Place the back plate against the wall and mark the mounting points at the desired location. (Fig. 2)

5. Drill two one-eighth inch holes and insert anchors within the mounting surface. Anchors may not be required if securing to a wall stud or racking system. Insert the screws into the holes and test fit the backing plate for mounting to ensure it mounts easily onto the two screws and slides down onto the slotted openings freely (Fig. 3)

6. Reattached the back plate to the Remote Interface Controller. (Fig. 4)

7. Insert the three AA batteries.
   (only applicable with wireless installations)

8. The system will automatically acknowledge a wireless device (Remote Interface or Remote Sensor). Go to Setting “30” to define the Remote User Interface use.

9. Attach controller to the wall.

Installation of the Wine Guardian Remote Sensor

The wireless remote sensor is a combination temperature and humidity sensor only. It is designed to be mounted within the wine cellar and can be used in combination with the remote interface controller or up to two additional remote sensors to read and control multiple areas within the wine cellar.

For a wired application you will require a RJ-9 communication cable.

Mounting the Wired Remote Sensor (Wired)

Fig. 1

Fig. 2

1. Disconnect the communication cable from the side of the Wine Guardian unit and the remote sensor. Route the communication cable within the wall and/or ceiling structure of the wine cellar to the desired controller mounting location.

2. Plan on mounting the remote sensor on a solid surface away from doors, corners, air outlets, drafts or heat generating equipment. Do not mount the remote sensor directly on an outside wall, a wall adjacent to a boiler room, or other hot area. Use a piece of foam insulation behind the sensor to insulate it from a hot or cold surface. The recommended height is four to five feet above the finished floor.

3. Remove the remote sensor's face plate (Fig. 1) and mark the mounting points at the desired location within the wine cellar (Fig. 2). Also, mark the location of the communication cable connection as this area will require sufficient clearance, for the cable to exit the wall and attach to the back of the sensor.

Fig. 3

Fig. 4

Fig. 5

4. Drill two one-eighth inch holes and insert anchors within the mounting surface. Anchors may not be required if securing to a wall stud or racking system. Insert the screws into the holes and test fit the backing plate for mounting to ensure it mounts easily onto the two screws and slides down onto the slotted openings freely. (Fig. 3)

5. Plug in the communication cable to the remote sensor and mount the Remote Sensor to the wall. (Fig. 3)

6. Reattach the sensor's faceplate (Fig. 4)

7. If multiple sensors are being used either connect each Sensor to each other in series using RJ-9 cable or purchase a RJ-9 Splitter (Fig. 5) to be connected to the unit.

NOTE: **Remote Sensor's will always be treated as "enabled" when hardwired. Their temperature and humidity readings will always be calculated towards the average by the system.**

Mounting the Remote Sensor (Wireless)

Fig. 1

Fig. 2

Fig. 3

Fig. 4

Fig. 5

1. Disconnect the controller wire from the side of Wine Guardian unit and save for future use.

2. Plan on mounting the remote sensor on a solid surface away from doors, corners, air outlets, drafts or heat generating equipment. Do not mount the remote sensor directly on an outside wall, wall adjacent to a boiler room, or other hot area as this runs the risk of influencing its temperature readings. The recommended height is four to five feet above the finished floor.

3. Remove the sensor face plate (Fig. 1). Mark the mounting points at the desired location within the wine cellar (Fig. 2).

4. Drill two one-eighth inch holes and insert anchors within the mounting surface. Anchors may not be required if securing to a wall stud or racking system. Insert screws to secure the sensor to the wall to ensure it mounts easily onto the two screws and slides down onto the slotted openings freely.

5. Input the three AA batteries. (Fig. 3)
   (only applicable with wireless installations)

6. Pair the sensor with the unit
   (See Page 59 for Pairing Instructions)

NOTE: Once Paired the Remote Interface's readings will be included into the system's temperature and humidity averages.

7. Mount the Remote Sensor on the wall (Fig. 4)

8. Reattach the sensor's faceplate (Fig. 5)

Remote Sensor Pairing Instructions –Multiple Sensors (Wireless)

Fig. 1

Fig. 2

If using multiple remote temperature/humidity sensors in your application, refer to the figures and the procedure below to change each remote sensor's device number (Three Remote Sensors maximum). Each Remote Sensor must have its own device number and must also be on the same RF channel (Setting 31) as the system they are being paired with.

1. To change the remote sensor's device number, see the following instructions:

a. Use a pin to press the button for about half a second and release (Fig. 1).

b. Observe the LED on the side of the remote sensor (Fig. 2). The LED will flash once for a Device #1, twice for a #2, three times for a #3. At any time, while in this mode press the button once to change the device number. Once each remote sensor has its own unique device number simply wait for the LED to stop flashing and the setting will be saved.

2. To change the remote sensor's RF channel, see the following instructions:

NOTE: Check what RF Channel the System is set to using Setting 31 to more easily connect your Remote Sensors.

a. Use a pin to press the red button at the back of the Remote Sensor for 5 seconds until the LED blinks rapidly then release the button.

b. The LED will flash a number of times to portray which RF channel it is set to and repeat a total of 3 times.

c. To change the RF channel, press the button once to increment the RF channel. There are 12 possible RF channels. All Remote Sensors will need to be on the same channel for the system to detect them. To save the RF channel setting simply wait for the mode to time out by not pressing the button.

Standard Controller Functions

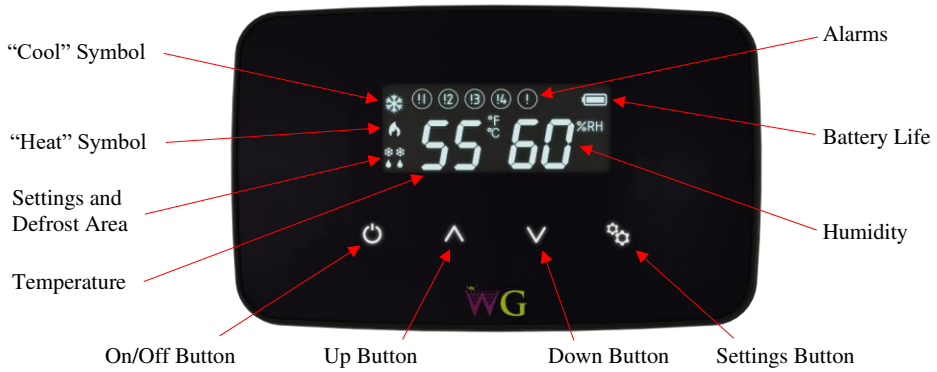

How to:		
Turn system on/off		• Press the "On/Off" button once. **Note: There is a five (5) minute time delay before the system turns on or turns off.**
Change temperature		• Press the "Up" arrow once. The display will show the existing temperature setpoint. • Press the up or down arrow buttons to adjust the temperature to the desired set point.
Change humidity		• Press the "Up" arrow once. This display will show the existing temperature setpoint. • Press the "Settings" button once to display the "Humidity" setpoint. • Press the "Up" or "Down" arrows to adjust the humidity to the desired set point. **Note: A Wine Guardian humidifier must be installed and Setting 6 set to "1" or "2" before the controller will let you change percent humidity.**
Change Settings Cooling/ Heating / Auto		• Press the Setting button once to display the setting function at the bottom of the screen. • Press the Settings button again to scroll through settings for cool only, heat only or heat/cool only – auto mode.

Settings – Press and hold the "Mode" button for five seconds to access the following settings.

Settings – Press and hold the "Settings" button for five (5) seconds to access the following settings.

Degrees F or Degrees C		**Setting 1** • Press the "Up" arrow to change temperature from °F to °C. • Press the "Down" arrow to change temperature from °C to °F.
Low temperature alarm setpoint		**Setting 2** • Press "Settings" button to advance to Setting 2. • Press the "Up" or "Down" arrow buttons to adjust to the desired setpoint. Factory default is 50°F (10°C).
High temperature alarm setpoint		**Setting 3** • Press "Settings" button to advance to Setting 3. • Press the "Up" or "Down" arrow buttons to adjust to the desired setpoint. Factory default is 65°F (18°C).
Low humidity alarm set point		**Setting 4** • Press "Settings" button to advance to Setting 4. • Press the "Up" or "Down" arrow buttons to adjust to the desired setpoint. Factory default is 5%.
High humidity alarm setpoint		**Setting 5** • Press "Settings" button to advance to Setting 5. • Press the up or down arrow buttons to adjust to the desired setpoint. Factory default is 95%.
Add or remove humidifier		**Setting 6** • Press "Settings" button to advance to Setting 6. • Press the "Up" or "Down" arrow buttons to adjust to the desired setpoint. Factory default is zero (0). Zero (0) = No humidifier One (1) = Integral Wine Guardian mounted humidifier Two (2) = Stand-alone remote mounted humidifier

Fan AUTO or ON		**Setting 7** • Press “Settings” button to advance to Setting 7. • Press the “Up” or “Down” arrow buttons to adjust number to the desired set point. Factory default is zero (0). Zero (0) = Auto–fan only turns on when there is a call for cooling or heating One (1) = Fan On–fan remains on continuously
Compressor anti-short cycling		**Setting 8** • Press “Settings” button to advance to Setting 8. • Press the “Up” or “Down” arrow buttons to adjust to the desired time in one-minute increments. Maximum is 10 minutes, minimum is 3 minutes. Factory default is 5 minutes. Compressor anti-short cycling time is the amount of allowable time between compressor stop and restart. Rapid start/stop of compressors can cause premature failure. **WINE GUARDIAN DOES NOT RECOMMEND SETTINGS LOWER THAN FACTORY DEFAULT.**
Defrost sensor enable/disable		**Setting 9** • Press “Settings” button to advance to Setting 9. • Press the “Up” or “Down” arrow buttons to adjust to the desired setpoint. 1 will equal enabled and a 0 (zero) will equal disabled.
Defrost cut-in temperature		**Setting 10** • Press "Settings" button to advance to Setting 10. • Press the “Up” or “Down” arrow buttons to adjust to the desired setpoint. This setting is adjustable from 25°F to 40°F. Factory default is 39°F. There must be at least a 1°F difference between defrost cut-in and cut-out set points.

Defrost cut-out temperature		**Setting 11** • Press "Settings" button to advance to Setting 11. • Press the “Up” or “Down” arrow buttons to adjust to the desired setpoint. This setting is adjustable from 35°F to 50°F. Factory default is 40°F. **Note: This setpoint must be 1°F/°C higher than setting 10.** **Note: If °C is selected and then switched back to °F the default cut-out will change to 41°F.**
Defrost check interval		**Setting 12** • Press "Settings" button to advance to Setting 12. • Press the “Up” or “Down” arrow buttons to adjust to the desired setpoint. This setting is adjustable from 30 min at 0 (zero), 1 hour at 1, and then in 1 hour increments up to a maximum of 12 hours at 12.
Room temperature offset		**Setting 13** • Press “Settings” button to advance to Setting 13. • Press the “Up” or “Down” buttons to adjust to the desired set point. Maximum setting is +5°F, minimum setting is -5°F. Factory default is zero (0). Room temperature offset changes the actual display reading (temperature only) by the value of this setting. Example: Sensor reading = 55°F (13°C) Setting 15 set to +4 Display reading = 59°F (15°C)
RH offset		**Setting 14** • Press “Settings” button to advance to Setting 14 • Press the “Up” or “Down” buttons to adjust to the desired setpoint. This setting allows the adjustment of %RH reading by +/-10%. Factory default is 0%RH.

Differential temperature adjustment		**Setting 15** • Press “Settings” button to advance to Setting 15 • Press the “Up” or “Down” buttons to adjust to the desired setpoint. This setting changes the system/compressor turn-on temperature above setpoint. Factory default is 1°F. Example: Sensor reading = 55°F (13°C) Setting 17 set to +3°F System/compressor turns on at 58°F (14°C)
Temperature deadband		**Setting 16** • Press “Settings” button to advance to Setting 16. • Press the “Up” or “Down” buttons to adjust to the desired setpoint. This setting is the minimal allowable temperature difference between heating and cooling setpoints. Maximum is 5°F (3°C), minimum is 1°F (1°C). Factory default is 2°F (1°C).
Condensate switch		**Setting 17** • Press “Settings” button to advance to Setting 17. • Press the “Up” or “Down” buttons to adjust to the desired setpoint. This setting disables or enables the Condensate switch. 0 (zero) is disabled, 1 is enabled. Factory default is 0.
Reserved		**Settings 18 & 19** Reserved for additional fields.
System type defaults		**Setting 20** System setting. **DO NOT CHANGE.**
Reserved		**Settings 21-29** Reserved for additional fields.

Define remote user interface		**Setting 30** • Press “Settings” button to advance to Setting 30 • Press the “Up” or “Down” buttons to adjust to the desired setpoint. 1 = Remote User interface #1 mounted within the wine room space and enabled 2 = Remote User interface #2 mounted within the wine room space and enabled 3 = Remote User Interface #1 disabled - will display only and can be mounted outside of wine room 4 = Remote User Interface #2 disabled - will display only and can be mounted outside of wine room
RF channel select		**Setting 31** • Press “Settings” button to advance to Setting 31. • Press the “Up” or “Down” buttons to adjust to the desired setpoint. Each system needs all devices to be on the same RF channel. 0 = RF disabled - system must be hardwired 1 through 12 = RF enabled and 12 channels available
Reserved		**Settings 32-39** Reserved for additional fields.
Thermistor 1 N/A	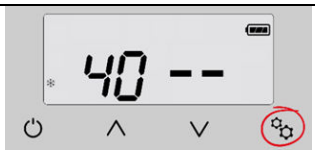	**Setting 40** Not Available Reserved for Thermistor
Thermistor 2 N/A	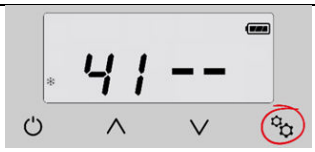	**Setting 41** Not Available Reserved for Thermistor
Thermistor 3 N/A	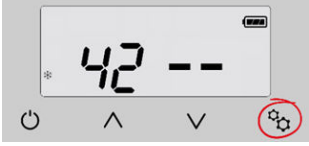	**Setting 42** Not Available Reserved for Thermistor

Thermistor 4		**Setting 43** • Press “Settings” button to advance to Setting 43. No setting adjustment. Displays the defrost sensor temperature.
Reserved		**Setting 44-49** Reserved for additional fields.
Output test		**Setting 50** • Press “Settings” button to advance to Setting 50. • Press the “Up” or “Down” buttons to adjust to the desired setpoint. Steps through relays as output test. 0 = Disabled 1 = Enabled
Reserved		**Setting 51-69** Reserved for additional fields.
Default temperature		**Setting 70** • Press “Settings” button to advance to Setting 70. No setting adjustment. Initial temperature set point. Will revert to this setting upon loss of power.
Default %RH	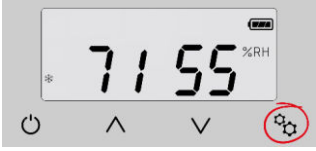	**Setting 71** • Press “Settings” button to advance to Setting 71. No setting adjustment. Initial relative humidity set point. Will revert to this setting upon loss of power.
Default mode		**Setting 72** • Press “Settings” button to advance to Setting 72. • Press the “Up” or “Down” buttons to adjust to the desired setpoint. Initial mode set point. Will revert to this setting upon loss of power. 1 = Auto 2 = Cool 3 = Heat

Alarm Codes

High temperature alarm **Flashing temperature number**	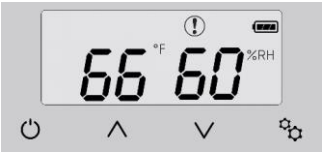	Flashing temperature number along with (!) symbol will remain on screen until temperature falls below the High Temperature Alarm set point (Setting 3).
Low temperature alarm **Flashing temperature number**	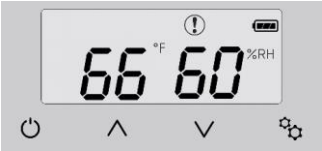	Flashing temperature number along with (!) symbol will remain on screen until temperature rises above the Low Temperature Alarm set point (Setting 2).
High humidity alarm **Flashing humidity number**		Flashing humidity number along with (!) symbol will remain on screen until humidity falls below the High Humidity Alarm setpoint (Setting 5).
Low humidity alarm **Flashing humidity number**		Flashing humidity number along with (!) symbol will remain on screen until humidity rises above the Low Humidity Alarm set point (Setting 4).
!1 = High Pressure Switch Fault		**THIS ALARM FORCES THE SYSTEM TO SHUT DOWN** (!1) will remain on screen until the High Pressure reset switch has been reset. See the trouble shooting guide page 57 for "Instructions to Reset High Pressure Switch".
!2 = CS (Condensate Switch Fault)		**THIS ALARM FORCES THE SYSTEM TO SHUT DOWN** (!2) will remain on screen until the CS (condensate switch) fault is resolved and reset.

!3 = Defrost Sensor Fault		**THE SYSTEM REMAINS OPERATIONAL DURING THIS ALARM** Defrost sensor has been shorted, disconnected or open. (!3) will remain on screen until the defrost sensor issue has been resolved.
!4 = Communication loss		**THE SYSTEM REMAINS OPERATIONAL DURING THIS ALARM** Bad or no data transfer between sensing device and main control board. "!4" will remain on screen until communication is re-established.

!WARNING!

Only one Unit can be set up at a time. Ensure other units are unplugged while pairing a unit to ensure there are no communication issues between Wine Guardian Units

Inspection and Start Up Checklists

Receiving and Inspecting

- ✓ Unit received undamaged
- ✓ Unit received complete as ordered including accessories

Handling and Installing

- ✓ Unit mounted on solid level surface
- ✓ Sufficient space allowed for access to unit and accessories
- ✓ Proper electrical service provided
- ✓ Water provided to humidifier
- ✓ Drain lines and trap installed properly
- ✓ Ductwork, fittings and grilles installed properly
- ✓ All cold duct surfaces insulated
- ✓ No obstructions to air flow around condensing unit

Starting-up the Unit

- ✓ General visual inspection looks good.
- ✓ All wiring connections checked
- ✓ All ducts, grilles and panels in place
- ✓ Start unit
- ✓ Check ducts and connections for air leaks
- ✓ Balance air distribution
- ✓ Confirm condenser airflow is unrestricted
- ✓ Verify cooling and heating operation

Check for excessive noise or vibration

WG SPLIT SYSTEM START-UP CHECKLIST

System Information

Fan Coil Serial Number: (Located to the right of the main control panel)	Condenser Serial Number: (Label located near refrigerant piping)

Customer Information

First Name:		Last Name:
Address:		City:
State:	Zip:	Date of Purchase:
Email:		Phone #:

Installer Information

Company Name:	License#	Date of Startup:
Address		Technician:
City		Certification ID Number
State:	Zip:	Certification Source (e.g. NATE):
Company Phone #:		Technician Phone #:
Company Email:		Technician Email:

Email completed form to service@wineguardian.com

Pre-Start-Up
Is there any shipping damage? If so, Where?
Will this damage prevent unit start-up?
Check power supply. Does it agree with unit?
Has the ground wire been connected?
Has the circuit protection been sized and installed properly?
Are the power wires to the unit sized and installed properly?
Have compressor hold down bolts been loosened (snubber washers are snug, but not tight)?
Controls
Are thermostat and indoor fan control wiring connections made and checked?
Are all wiring terminals (including main power supply) tight?
Has crankcase heater been energized for 24 hours?
Indoor Unit
Has water been placed in drain pan to confirm proper drainage?
Piping
Have leaks checks been made at compressor, outdoor and indoor coils, TXVs (Thermostatic Expansion Valves), Filter Driers, with a leak detector?
Locate, Repair, and Report any leaks.
Have service valves been opened?
Check Voltage L1: L3:
Start-up After at least 10 minutes running time, record the following measurements
Suction Pressure:
Suction line temperature:
Discharge pressure:
Discharge line temperature:
Entering outdoor unit air temperature:
Leaving outdoor unit air temperature:
Indoor unit enter-air DB (dry bulb) temperature:
Indoor unit leaving-air WB (wet bulb) temperature:
Indoor unit leaving-air DB (dry bulb) temperature:
Indoor unit leaving-air WB (wet bulb) temperature:
Compressor Amps

Starting-up and Operating the Wine Guardian Split System

Now that the installation is complete, check to make sure all ductwork and electrical connections are secure.

Replace all panels that were removed during installation. Check that all the openings in the unit are covered with a blank panel, a ductwork connection or a grille.

CAUTION

RISK OF PERSONAL INJURY
COVER ALL OPENINGS OF THE UNIT TO PREVENT A HAND OR FINGER FROM ACCESS INSIDE THE UNIT.

Turn on the Unit

Plug in the unit. Turn on the rocker switch on the side of the unit. The rocker switch lights up to indicate power to the unit. The unit may not come on right away due to the timer built into the circuiting to prevent short-cycling.

Testing the Fan

(Configuration Setting 7)

Factory default is "AUTO" fan operation. To change the fan setting, refer to page 52 of this manual.

- ✓ ON means the fan runs continuously and indicates that the power is on and the control circuit is energized and operating.
- ✓ AUTO means the fan runs only when the remote interface controller is calling for cooling, heating, or the humidistat is calling for humidification.

Running the Unit

- ✓ Check unit to confirm the compressor is running, such as the hum of the compressor or cool air leaving the unit.
- ✓ Check for any unusual noise or vibration, such as clanking or rubbing.

Initially, the unit may run continuously for several hours, up to a day or more, while it lowers the cellar temperature. Once the unit reaches the setpoint temperature, it shuts off and starts to cycle on and off as it continues to lower the bottle temperature to the setpoint. The cellar air reaches set point before the bottles. If the cellar temperature started at 75°F (23° C) the supply air temperature discharged from the unit will probably be 12 degrees to 15 degrees colder. As the cellar temperature decreases to 55°F (13°C) the supply temperature differential decreases 8 to 12 degrees colder.

NOTE: Temp flashes when cellar temperature falls below 65° F (18°C).
See page 56 for Hi Temp Alarm details.

Cycling the Unit

The fans continue to free-wheel for several minutes when the unit cycles off. This is normal. If the unit is furnished with an Xtreme low ambient control, the condenser fan also cycles on and off during cooling. This maintains the head pressure on the compressor under Xtreme low ambient conditions, and is normal. The bottom of the compressor stays warm even when the unit is off to keep the lubricating oil warm and separated from the refrigerant.

Setting the Remote Interface Controller

Normal settings are between 54 and 58 Deg F (12-14 Deg C).

Regulating the Wine Cellar Temperature

Wine cellars have a natural temperature gradient of approximately 5 to 10 degrees between floor and ceiling. To increase or decrease the temperature in various zones, change the air flow patterns.

To keep the entire wine cellar at the same temperature, set the remote interface controller to run the supply fan continuously and not just when the cooling is operating. Set Setting 7 to Setting 1.

NOTE: To monitor the Cellar Temperature, place thermometers in various locations in the cellar to monitor the temperature zones. Change the temperature in various zones by shifting the air flow patterns.

Changing the Air Flow Direction

The optional grilles furnished with Wine Guardian are single directional. Rotate the grilles to change the direction of the air flow.

When using multiple supply ductwork, it is necessary to balance the air flow between the ductwork. If too much air flows though one duct but not enough air flows from the other duct, install a damper or other restriction into the duct with too much air. That will force more air to flow out the other duct.

Maintenance

General

WARNING

BEFORE PERFORMING MAINTENANCE ON THE UNIT, READ AND UNDERSTAND THE SAFETY INFORMATION CONTAINED WITHIN THE SAFETY CHAPTER OF THE WINE GUARDIAN MANUAL.

DANGER

HIGH VOLTAGE - RISK OF SERIOUS INJURY OR DEATH
HIGH VOLTAGES ARE PRESENT IN THE CABINETS. TURN OFF ALL POWER. USE THE LOCKOUT/TAGOUT PROCEDURE BEFORE OPENING PANELS.

CAUTION

SHARP EDGES
RISK OF SEROUS INJURY
SHARP EDGES ARE PRESENT ON THE FAN WHEELS, HOUSING, FINS AND COILS.

NOTE: Maintenance on Wine Guardian units requires working with high voltage and sheet metal with possible sharp edges. Only qualified personnel should perform maintenance. Some tasks require knowledge of mechanical and electrical methods. Make sure you are familiar with all hazards, general safety related procedures, and safety labels on the unit.

EXPOSURE TO MICROBIAL GROWTH (MOLD) CAN CAUSE SERIOUS HEALTH PROBLEMS

NOTE: Standing water in drain pans promote microbial growth (mold) that cause unpleasant odors and serious health-related indoor air quality problems. If mold is found, remove it immediately and sanitize that portion of the unit.

The Wine Guardian is designed for minimum maintenance. The refrigerant system is hermetically sealed and requires no maintenance. The fans are permanently lubricated and require no maintenance. Some maintenance to the unit may be required due to dust or dirt in the air stream.

CAUTION

SHARP EDGES RISK OF SERIOUS INJURY
SHARP EDGES ARE PRESENT ON THE FINS AND COILS.

Cleaning the Condensate Drain System

The condensate drain system traps dust and dirt. Clean the drain system once a year.

1. Shut off the rocker switch and unplug the unit.
2. Remove the duct on the evaporator inlet.
3. Inspect the drain pan under the coil.
4. If drain pan appears soiled, pour some hot water mixed with liquid bleach (diluted solution) along the length of the pan to flush the dirt down the drain tube.
5. Continue this treatment until the drain appears clean and free of dirt.
6. Reinstall or duct collar.
7. Plug in the unit and restart.

Cleaning the Humidifier (optional)

If the unit was furnished with a humidifier it requires periodic maintenance. Follow the instructions in the humidifier guide.

Heating Coil Option

The heating coil is located between the evaporator coil and blower inside the transition duct. It contains the heating element and high temperature limit switches. The heating coil is wired to work in conjunction with the remote interface controller. Since the remote interface controller prevents the heating and cooling circuits from being energized at the same time, no additional power wiring is needed. We do recommend using the AUTO mode on the remote interface controller so it can switch from heating to cooling automatically. If using either the heat or cool only mode, the remote interface controller will **not** switch automatically.

No additional maintenance is required for the heating coil. To test the heating coil operation, set the remote interface controller on HEAT and set the temperature above the cellar temperature. The supply air temperature should rise above the return air temperature by an amount shown in the specifications.

Maintenance Schedule

Monthly

- ✓ (or quarterly depending on experience with individual cellar)
  Check and drain trap – clean if needed.
- ✓ Check for noise or vibration.
- ✓ Check for short-cycling of the unit – a turning on and off of the compressor unit more than eight times/hour.

Yearly

(in addition to monthly)

- ✓ Check evaporator and condensing unit for dirt – use a vacuum with a brush attachment to clean the coils.
- ✓ Clean condensate pan under the evaporator coil by flushing. Be careful to keep the drain pans clear of any and all debris.
- ✓ Inspect cabinet for corrosion or rusting – clean and paint.
- ✓ Inspect for dirt buildup on or inside the unit. Clean unit by vacuuming or wiping it down.
- ✓ Check for loose insulation, fasteners, gaskets or connections.
- ✓ Check the wiring connections and integrity or cords.
- ✓ Examine ducts for any cracks or breach.
- ✓ Check fan and solenoid on humidifier.
- ✓ Replace humidifier pad (if used).

Troubleshooting

WARNING

BEFORE PROCEEDING, READ AND UNDERSTAND THE SAFETY INFORMATION CONTAINED IN THE SAFETY SECTION OF THE WINE GUARDIAN MANUAL.

Visit our Troubleshooting page on wineguardian.com/troubleshooting for more information.

Typical start up problems

Possible Cause	Solution
Loose, improper or defective remote interface controller or humidistat cable	Check power, and remote interface controller or humidistat cable
Incorrect remote interface controller or humidistat (optional) settings	Check the remote interface controller and optional humidistat setup for the application
Changed settings on the remote interface controller	A common problem is not waiting long enough for the internal timers to complete their timed delay

Unit does not start up	
Power Switch Light is Off	
Possible Cause	**Solution**
Switch not on No power to outlet Unit not plugged in	Turn on switch Check circuit breaker and wiring Plug in the unit
Power switch light is on and the remote interface controller light is off	
Possible Cause	**Solution**
No power to remote interface controller	Check main control board for L.E.D. indication Check wiring for loose, broken or frayed connections Check wiring for proper splicing Remote interface controller may be faulty
Power switch light is on and the remote interface controller light is on	
Possible Cause	**Solution**
Remote interface controller is not set up properly	Check remote interface controller set up in the guide Press fan ON switch to check evaporator fan only

Unit is operating and blows evaporator air but the supply air is not colder than the return air from the cellar	
Possible Cause	**Solution**
Remote interface controller not set up properly	Check remote interface controller setup in the manufactures guide
Compressor not operating	High pressure switch open (button up) Alarm will appear on remote interface controller
Condenser airflow is blocked	Remove blockage Clean filter and coil (if needed) Head Pressure (HP) switch is open Reset HP switch **See reset instructions on pg. 70**

Cellar temperature too cold (below 51° (10°C) when unit is running	
Possible Cause	**Solution**
Remote interface controller set too low on cooling	Reset remote interface controller to higher cooling temperature
Heating coil (optional) not operating	Check for remote interface controller rise across coil
Remote interface controller set too low on heating	Reset remote interface controller to higher heating temperature
Remote interface controller not controlling temperature	Remote interface controller mounted in improper location

Cellar temperature too cold (below 51° (10°C) when unit is not running	
Possible Cause	**Solution**
Too much heat loss to adjacent spaces	Increase insulation around the ductwork Check and clean filter and coil Coil frozen – shut off unit for two hours
Cellar loads are too high	Install additional insulation

Humidity too low or supply air is too cold, without optional humidifier	
Possible Cause	**Solution**
Not enough evaporator airflow	Remove blockage in supply or return ductwork Check and clean filter and coil Coil frozen – shut off unit for two hours
Defective thermal expansion valve	If under warranty call for service If not under warranty call a refrigeration technician
Temperature set too cold	Raise temperature setpoint

Humidity Issues

Too low, without optional humidifier

Possible Cause	Solution
No moisture being added to cellar	Add Wine Guardian humidifier or a room humidifier

Humidity too low, with optional humidifier

Possible Cause	Solution
Humidifier not operating	Check wiring for loose, broken or frayed connections Check humidistat set up Check for water flow and solenoid valve operation
Humidifier operating	Check for water being hot Check drip pad – replace if scaled No vapor barrier around cellar

Humidity too high when unit is running but not cooling

Possible Cause	Solution
Compressor not operating	Check and reset high limit switch Clear blockage of condenser airflow
Ambient temperature is too high	Reduce temperature or draw condenser air from another space

Humidity too high when unit is not running

Possible Cause	Solution
Unit needs to run to dehumidify	Run unit. Seal openings around doors (gasket and sweep)

Humidity too high when unit is running and cooling

Possible Cause	Solution
Too much moisture in cellar	Poor vapor barrier installation Humidifier malfunction refer to the humidifier instructions Add dehumidifier to surrounding space

Unit operates but the power switch light is not ON	
Possible Cause	**Solution**
Bulb is burned out	Replace bulb

Unit is leaking water	
Possible Cause	**Solution**
Piping from unit to drain is trapped	Re-pipe to remove external traps
Trap plugged	Clean trap
Condensate pan plugged	Remove blockage and clean
Unit not level	Level with shims

Unit is running properly, but the sound of the unit objectionable	
Possible Cause	**Solution**
Noise is from airflow	Redirect airflow Add baffles Add insulated ductwork
Noise is from unit	Add sound baffle between unit and occupied

High Pressure Switch has Shut the Unit Down

Every Wine Guardian unit has a manual reset high pressure switch in the refrigeration system. This switch shuts the compressor and condenser down if the head pressure in the system is too high. It is intended to protect the compressor. Restricted airflow through the condenser is the most common reason for the pressure becoming too high. This can be caused by dust covering the filter or an obstruction blocking the airflow in the duct or grille.

Possible Cause	Solution
Head pressure in unit is too high because an obstruction is restricting air flow	Remove the obstruction at the condensing unit or clean the condenser coil. Then restart the unit after resetting the using the high pressure switch.

Instructions to Reset High Pressure Switch

1. Remove the side access panel at the condensing unit
2. Locate the high-pressure switch near the compressor
3. Push in the reset button.
4. Re-install top and side access panels

Advanced Troubleshooting

IMPORTANT
This section is intended for qualified refrigeration service technicians only. The technician should repeat all of the previous troubleshooting steps before taking action on these more technical solutions.

Evaporator Coil is Freezing

Possible Cause	Solution
Charge too low	Check sight glass Check for leaks Add refrigerant
TXV malfunctioning	Repair or replace

High pressure switch keeps tripping even after checking for obstructions and dirty filters/coils

Possible Cause	Solution
Condenser fan not operating	Repair or replace
Defective switch	Replace

Unit cycles on and off more than 8 times/hr

Possible Cause	Solution
Remote interface controller malfunction remote interface controller information	Check the remote interface controller guide for
Low suction pressure	Check low pressure switch Check pressure and adjust superheat

High pitched or loud rubbing noise, clanking or vibration

Possible Cause	Solution
Fans loose or malfunctioning	Repair or replace
Excessive compressor vibration	Replace
TXV malfunctioning	Repair or replace

Replacing the blowers

When replacing the fan or motor, replace the fan and motor as a unit. Do not remove the motor from the impeller wheel.

Contact and Warranty Information

Contact Information

Wine Guardian
7000 Performance Drive
North Syracuse, NY 13212
Toll free: (800) 825-3268
or
Help.wineguardian.com

Normal business hours are 8 a.m. to 5 p.m. Eastern, Monday-Friday.

Web site: www.airinnovations.com
Email: info@airinnovations.com

Warranty and Warranty Procedure

The Wine Guardian unit serial number is on the serial plate and noted on all packing lists and bills of lading and, along with the shipping date, is kept on file at Wine Guardian for warranty purposes. **All correspondence regarding warranty must include the model number and serial number of the unit involved.** Note that the warranty is null and void if the serial number on the unit or compressor is altered, removed or defaced. All inquires or correspondence regarding warranty should be handled in accordance with the "Warranty" and directed to:

Wine Guardian
7000 Performance Drive
North Syracuse, New York 13212
Attn: Service Department
Toll Free: (800) 825-3268
Fax (315) 452-7420

This procedure includes but is not limited to:

- Obtaining authorization from Wine Guardian prior to incurring any charges for repair or replacement under warranty.
- Or returning prepaid within 30 days any and all defective parts.

Warranty

GENERAL

Wine Guardian warrants, to the original buyer, its goods and all parts thereof to be free from defects in material and workmanship for a period of two (2) years from the date of invoicing assuming **NORMAL USE AND SERVICE.**

LIABILITY

Wine Guardian liability shall be limited to the repair or replacement (at its option) of any part, which, at our sole discretion, is determined to be defective. The purchaser shall pay all transportation costs. Additionally, if a malfunction occurs within the first year from the date of invoice, **Wine Guardian** will reimburse the reasonable cost of labor required for the repair or replacement provided authorization is obtained from one of our authorized representatives prior to incurring any labor charges.

LIMITATIONS OF LIABILITY

THESE WARRANTIES ARE MADE IN LIEU OFF ALL OTHER WARRANTIES EXPRESSED OR IMPLIED, INCLUDING ANY IMPLIED WARRANTY OF MERCHANTABILITY OR FITNESS FOR A PARTICULAR PURPOSE AND IN LIEU OF ANY OTHER OBLIGATION OR LIABILITY, INCLUDING LIABILITY FOR ANY INCIDENTAL OR CONSQUENTIAL DAMAGES. **Wine Guardian** will not be responsible for any costs or liabilities whatsoever resulting from improper installation or service of its equipment. In the event that **Wine Guardian** or its distributors are found liable for damage based on any defect or nonconformity in the products, their total liability for each defective product shall not exceed the purchase price of such defective products. No person or representative is authorized to change these warranties or assume any other obligations or liabilities for **Wine Guardian** in connection with the sale of its systems.

INDEMNIFICATION

Purchaser agrees to indemnify, hold harmless and defend seller and its officers, directors, agents and employees from and against any and all claims, liabilities, costs and expenses arising out of or related to Purchaser's use of the goods, or in any way involving injury to person or property or accident occasioned by the goods sold by **Wine Guardian** to Purchaser.

FOREIGN GOVERNMENT AND INDIAN NATIONS

If Purchaser is a foreign government or an Indian nation, Purchaser hereby expressly waives its defense of sovereign immunity in the event of a dispute between Purchaser and **Wine Guardian** regarding this invoice and Purchaser expressly acquiesces to the jurisdiction of the federal and state courts of the United States.

SEVERABILITY

If one or more of the provisions contained in this contract shall for any reason be held to be invalid, illegal or unenforceable in any respect, such invalidity, illegality or unenforceability shall not affect any provision of this contract, but this contract shall be construed as if such invalid, illegal or unenforceable provision had never been contained.

ADDITONAL REQUIREMENTS

If a defect covered by the Warranty occurs, contact Wine Guardian for authorization to proceed with corrective action. Do not return any parts or incur any charges for which you expect to be reimbursed under this Warranty without receiving this authorization. If parts are replaced under this Warranty, the defective parts must be returned prepaid within 30 days. This warranty shall be null and void in its entirety if the Serial Number on the air conditioner or compressor is altered, removed or defaced.